JVC

SERVICE MANUAL

MICRO COMPONENT SYSTEM

UX-T150
UX-T151

COMPACT disc DIGITAL AUDIO

Cassette Mechanism SLC-S1M
System CPU UPD78064GF
Optical Pickup OPTIMA-150S
CD Signal Processor MN35510

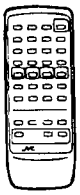

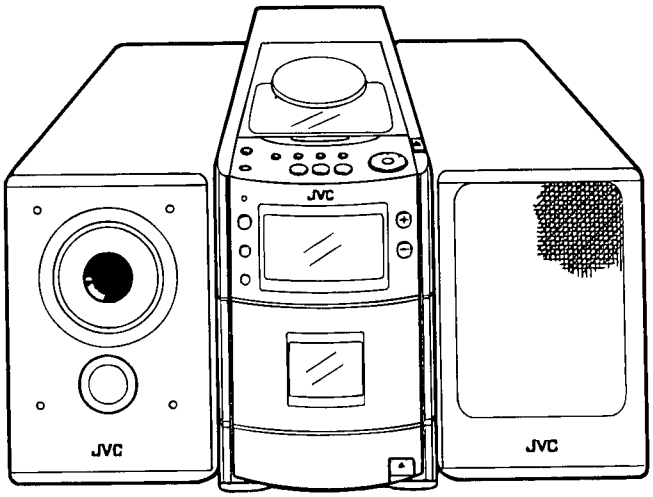

Area Suffix (UX-T150)

B ---------- U.K.
E ------ Continental Europe
EE --------- Eastern Europe
EN -------- Northern Europe
UB ---------- Hong Kong
UF ---------- China
US ---------- Singapore
UX ---------- Saudi Arabia
U ---------- Other Areas

Area Suffix (UX-T151)

B ---------- U.K.
E ------ Continental Europe
EN -------- Northern Europe

Contents

1. Safety Precautions ---------- 1-2
2. Important for Laser Products ---------- 1-3
3. Instructions ---------- 1-4～15
4. Removal of Main Parts ---------- 2-1
5. Main Adjustment ---------- 2-10
6. Description of Main ICs ---------- 2-14
7. Wiring Connection ---------- 2-22
8. Block Diagram ---------- 2-23
9. Standard Schematic Diagrams ---------- 3-1
10. Location of P.C. Board Parts ---------- 3-11
11. Parts List ---------- 4-1
12. Electrical Parts List ---------- 4-5
13. Packing ---------- 4-26

COPYRIGHT © 1998 VICTOR COMPANY OF JAPAN, LTD.

No.20685
May 1998

Safety Precautions

1. This design of this product contains special hardware and many circuits and components specially for safety purposes. For continued protection, no changes should be made to the original design unless authorized in writing by the manufacturer. Replacement parts must be identical to those used in the original circuits. Services should be performed by qualified personnel only.
2. Alterations of the design or circuitry of the product should not be made. Any design alterations of the product should not be made. Any design alterations or additions will void the manufacturer's warranty and will further relieve the manufacture of responsibility for personal injury or property damage resulting therefrom.
3. Many electrical and mechanical parts in the products have special safety-related characteristics. These characteristics are often not evident from visual inspection nor can the protection afforded by them necessarily be obtained by using replacement components rated for higher voltage, wattage, etc. Replacement parts which have these special safety characteristics are identified in the Parts List of Service Manual. Electrical components having such features are identified by shading on the schematics and by (⚠) on the Parts List in the Service Manual. The use of a substitute replacement which does not have the same safety characteristics as the recommended replacement parts shown in the Parts List of Service Manual may create shock, fire, or other hazards.
4. The leads in the products are routed and dressed with ties, clamps, tubings, barriers and the like to be separated from live parts, high temperature parts, moving parts and/or sharp edges for the prevention of electric shock and fire hazard. When service is required, the original lead routing and dress should be observed, and it should be confirmed that they have been returned to normal, after re-assembling.
5. Leakage currnet check (Electrical shock hazard testing)
   After re-assembling the product, always perform an isolation check on the exposed metal parts of the product (antenna terminals, knobs, metal cabinet, screw heads, headphone jack, control shafts, etc.) to be sure the product is safe to operate without danger of electrical shock.
   Do not use a line isolation transformer during this check.
   - Plug the AC line cord directly into the AC outlet. Using a "Leakage Current Tester", measure the leakage current from each exposed metal parts of the cabinet , particularly any exposed metal part having a return path to the chassis, to a known good earth ground. Any leakage current must not exceed 0.5mA AC (r.m.s.)
   - Alternate check method
     Plug the AC line cord directly into the AC outlet. Use an AC voltmeter having, 1,000 ohms per volt or more sensitivity in the following manner. Connect a 1,500Ω 10W resistor paralleled by a 0.15μF AC-type capacitor between an exposed metal part and a known good earth ground.
     Measure the AC voltage across the resistor with the AC voltmeter.
     Move the resistor connection to eachexposed metal part, particularly any exposed metal part having a return path to the chassis, and meausre the AC voltage across the resistor. Now, reverse the plug in the AC outlet and repeat each measurement. voltage measured Any must not exceed 0.75 V AC (r.m.s.). This corresponds to 0.5 mA AC (r.m.s.).

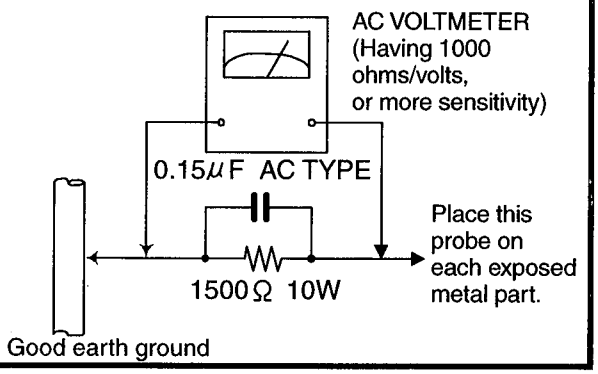

Warning

1. This equipment has been designed and manufactured to meet international safety standards.
2. It is the legal responsibility of the repairer to ensure that these safety standards are maintained.
3. Repairs must be made in accordance with the relevant safety standards.
4. It is essential that safety critical components are replaced by approved parts.
5. If mains voltage selector is provided, check setting for local voltage.

⚠ ***CAUTION*** **Burrs formed during molding may be left over on some parts of the chassis. Therefore, pay attention to such burrs in the case of preforming repair of this system.**

Important for Laser Products

1.CLASS 1 LASER PRODUCT

2.DANGER : Invisible laser radiation when open and inter lock failed or defeated. Avoid direct exposure to beam.

3.CAUTION : There are no serviceable parts inside the Laser Unit. Do not disassemble the Laser Unit. Replace the complete Laser Unit if it malfunctions.

4.CAUTION : The compact disc player uses invisible laserradiation and is equipped with safety switches whichprevent emission of radiation when the drawer is open and the safety interlocks have failed or are de feated. It is dangerous to defeat the safety switches.

5.CAUTION : If safety switches malfunction, the laser is able to function.

6.CAUTION : Use of controls, adjustments or performance of procedures other than those specified herein may result in hazardous radiation exposure.

⚠ ***CAUTION*** **Please use enough caution not to see the beam directly or touch it in case of an adjustment or operation check.**

VARNING : Osynlig laserstrålning är denna del är öppnad och spärren är urkopplad. Betrakta ej strålen.

VARO : Avattaessa ja suojalukitus ohitettaessa olet alttiina näkymättömälle lasersäteilylle.Älä katso säteeseen.

ADVARSEL : Usynlig laserstråling ved åbning , når sikkerhedsafbrydere er ude af funktion. Undgå udsættelse for stråling.

ADVARSEL : Usynlig laserstråling ved åpning,når sikkerhetsbryteren er avslott. unngå utsettelse for stråling.

REPRODUCTION AND POSITION OF LABELS

WARNING LABEL

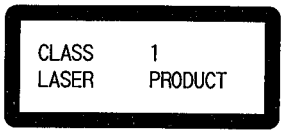

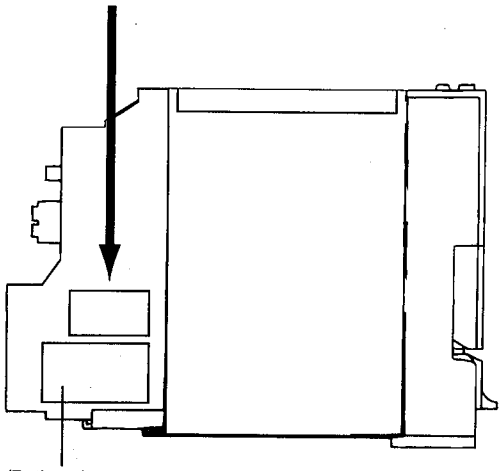

Name/Rating plate

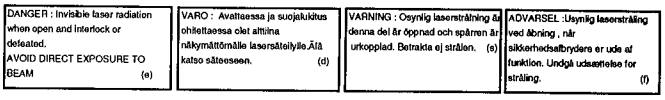
DANGER : Invisible laser radiation when open and interlock or defeated.
AVOID DIRECT EXPOSURE TO BEAM (e)

VARO : Avattaessa ja suojalukitus ohitettaessa olet alttiina näkymättömälle lasersäteilylle.Älä katso säteeseen. (d)

VARNING : Osynlig laserstrålning är denna del är öppnad och spärren är urkopplad. Betrakta ej strålen. (s)

ADVARSEL :Usynlig laserstråling ved åbning , når sikkerhedsafbrydere er ude af funktion. Undgå udsættelse for stråling. (f)

JVC

MICRO COMPONENT SYSTEM

UX-T151/T150

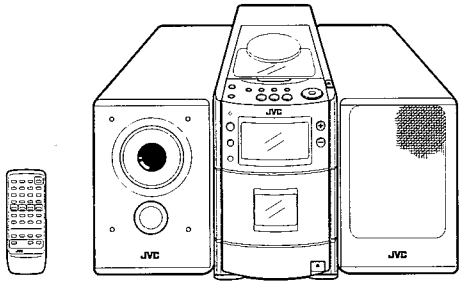

COMPACT disc DIGITAL AUDIO

INSTRUCTIONS

LVT0056-001A
[B]

ENGLISH

Thank you for purchasing this JVC product. Please read these instructions carefully before starting operation to be sure to obtain optimum performance and a longer service life from the unit.

CONTENTS

Features 3
Safety precautions 3
Handling precautions 4
Connections 5
Power supply 7
Names of parts and their functions 8
Remote control unit 10
Switching the power on/off 11
Volume, tone and other controls 11
Handling CDs 12
Playing CDs 12
Handling cassette tapes. 15
Cassette playback 15
Radio reception 16
Recording 17
Clock adjustment 19
Timer operations 20
Maintenance 23
Troubleshooting 23
Specifications ..... Back page

WARNING:
TO REDUCE THE RISK OF FIRE OR ELECTRIC SHOCK, DO NOT EXPOSE THIS APPLIANCE TO RAIN OR MOISTURE.

The lightning flash with arrowhead symbol, within an equilateral triangle, is intended to alert the user to the presence of uninsulated "dangerous voltage" within the product's enclosure that may be of sufficient magnitude to constitute a risk of electric shock to persons.

The exclamation point within an equilateral triangle is intended to alert the user to the presence of important operating and maintenance (servicing) instructions in

IMPORTANT FOR LASER PRODUCTS

PRECAUTIONS

1. CLASS 1 LASER PRODUCT
2. **DANGER:** Invisible laser radiation when open and interlock failed or defeated. Avoid direct exposure to beam.
3. **CAUTION:** Do not open the rear cover. There are no user serviceable parts inside the unit; leave all servicing to qualified service personnel.
4. **CAUTION:** The CD player uses invisible laser radiation and is equipped with safety switches which prevent the emission of radiation when the CD holder or CD tray is open. It is dangerous to defeat the safety switches.
5. **CAUTION:** Use of controls for adjustments and the performance of procedures other than those specified herein may result in exposure to hazardous radiation.

REPRODUCTION OF LABELS AND THEIR LOCATION

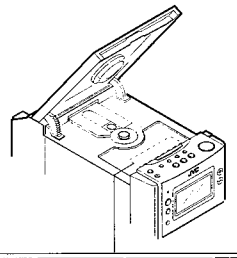

DANGER: Invisible laser radiation when open and interlock failed or defeated. AVOID DIRECT EXPOSURE TO BEAM. (e)	ADVARSEL: Usynlig laserstråling ved åbning, når sikkerhedsafbrydere er ude af funktion. Undgå udsættelse for stråling. (d)	VARNING: Osynlig laserstrålning när denna del är öppnad och spärren är urkopplad. Betrakta ej strålen. (s)	VARO: Avattaessa ja suojalukitus ohitettaessa olet altiina näkymättömälle lasersäteilylle. Ala katso säteeseen. (f)

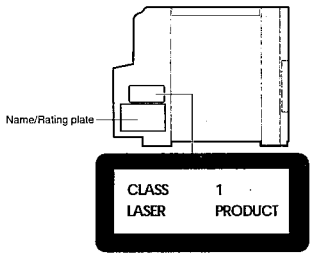

Caution:
This production contains a laser component of higher laser class than Class 1.

IMPORTANT (In the United Kingdom)
Mains Supply (AC 230 V~, 50 Hz only)

DO NOT cut off the mains plug from this equipment. If the plug fitted is not suitable for the power points in your home or the cable is too short to reach a power point, then obtain an appropriate safety approved extension lead or consult your dealer.
BE SURE to replace the fuse only with an identical approved type, as originally fitted, and to replace the fuse cover.
If nonetheless the mains plug is cut off ensure to remove the fuse and dispose of the plug immediately, to avoid a possible shock hazard by inadvertent connection to the mains supply.

IMPORTANT

DO NOT make any connection to the terminal which is marked with the letter E or by the safety earth symbol or coloured green or green-and-yellow.
The wires in the mains lead on this product are coloured in accordance with the following code:

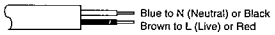

As these colours may not correspond with the coloured markings identifying the terminals in your plug proceed as follows:

The wire which is coloured blue must be connected to the terminal which is marked with the letter N or coloured black.

The wire which is coloured brown must be connected to the terminal which is marked with the letter L or coloured red.

IF IN DOUBT – CONSULT A COMPETENT ELECTRICIAN.

FEATURES

- CD-size micro component system consisting of 3 units
- Active Hyper-Bass PRO circuit for low-frequency sound reproduction
- One-touch operation (COMPU PLAY)
- 35-key remote control unit operates all CD, cassette deck and tuner functions
- Multi-function CD player
- Programmed play of up to 20 tracks
- Repeat Play
- Random Play
- U-Turn auto-reverse full-logic mechanism
- Auto tape select mechanism
- Metal (type IV) and CrO_2 (type II) tape can be played back for superior tone quality
- CrO_2 (type II) tape recording capability
- 2-band digital synthesizer tuner with 45-station (30 FM and 15 AM (MW/LW)) preset capability
- Seek/manual tuning
- Auto preset tuning
- Timer/Clock function
- Timer on/off with preset volume function
- Sleep timer can be set for up to 120 minutes

SAFETY PRECAUTIONS

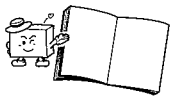

Prevention of Electric Shocks, Fire Hazards and Damage

1. Even when the ⏻/I button is set to STANDBY, a very small current will flow. To save power and for safety when not using the unit for an extended period of time, disconnect the power cord from the household AC outlet.
2. Do not handle the power cord with wet hands.
3. When unplugging from the wall outlet, always grasp and pull the plug, not the power cord.
4. Consult your nearest dealer when damage, disconnection, or contact failure affects the cord.
5. Do not bend the cord severely, or pull or twist it.
6. Do not modify the power cord in any manner.
7. To avoid accidents, do not remove screws to disassemble the unit and do not touch anything inside the unit.
8. Do not insert any metallic objects into the unit.
9. Unplug the power cord when there is a possibility of lightning.
10. If water gets inside the unit, unplug the power cord from the outlet and consult your dealer.
11. Do not block the unit's ventilation holes that allow heat to escape. Do not install the unit in a badly ventilated place.

⏻/I button
When the power cord is connected to a household AC outlet, the power indicator lights in red indicating the STANDBY mode. When the ⏻/I button is pressed, the power indicator goes out and the display window lights.

When this unit is plugged into an AC outlet, it consumes a small current to operate the remote control and timer, or to back up the memory of the microprocessor, even when the ⏻/I button is set to STANDBY.

Caution:
Proper Ventilation
To avoid risk of electric shock and fire, and to prevent damage, locate the apparatus as follows:
1. Front:
   No obstructions and open spacing.
2. Sides/Top/Back:
   No obstructions should be placed in the areas shown by the dimensions below.
3. Bottom:
   Place on a level surface. Maintain an adequate air path for ventilation by placing on a table with a height of 10 cm or more.

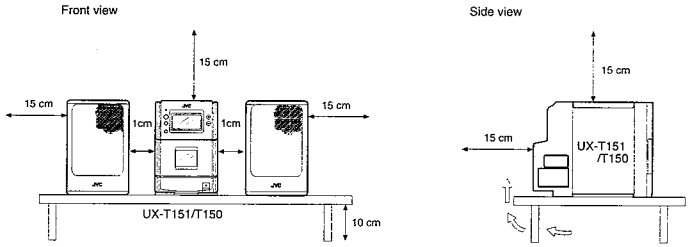

HANDLING PRECAUTIONS

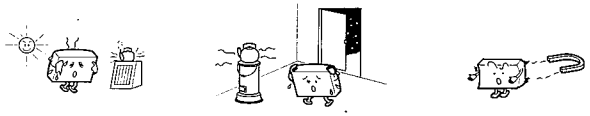

Do not use this unit in direct sunlight where it would be exposed to high temperatures above 40°C (104°F).

1. **Avoid installing in the following places**
   - Where it could be subject to vibrations.
   - Where it is excessively humid, such as in a bathroom.
   - Where it could be magnetized by a magnet or speaker.
2. **Pay attention to dust**
   Be sure to close the CD holder or CD tray so that dust does not collect on the lens.
3. **Condensation**
   In the following cases, condensation may occur in the unit, in which case the unit may not operate correctly.
   - In a room where a heater has just been switched on.
   - In a place where there is smoke or high humidity.
   - When the unit is moved directly from a cold to a warm room.

   In these cases, set the ⏻/I button to STANDBY and wait 1 or 2 hours before use.
4. **Volume setting**
   CDs produce very little noise compared with analog sources. If the volume level is adjusted for these sources, the speakers may be damaged by the sudden increase of output level. Therefore, lower the volume before operation and adjust it as required during play.
5. **Safety mechanism**
   This unit incorporates a safety interlock mechanism which switches the laser beam on and off, so that when the CD holder or CD tray is open, the laser beam stops automatically.
6. **Do not place cassette tapes, etc. near the speakers**
   Since there are magnets in the speakers, do not place tapes or magnetic cards on them as recorded data could be erased.
7. **Keep this unit away from your TV**
   When this unit is used near a TV, the TV picture could be distorted. If this happens, move this unit away from the TV. If this does not correct the situation, avoid using this unit when the TV is turned on.
8. **Cleaning the cabinet**
   If the cabinet gets dirty, wipe it with a soft, dry cloth. Never use benzine or thinner as these could damage the surface finish.
9. **When listening with headphones**
   - Do not listen at high volumes as this could damage your hearing.
   - For safety, do not drive while listening to this unit.

CONNECTIONS

- Do not switch the power on until all connections are completed.

Antenna connection and adjustment

- AM (MW/LW) loop antenna adjustment

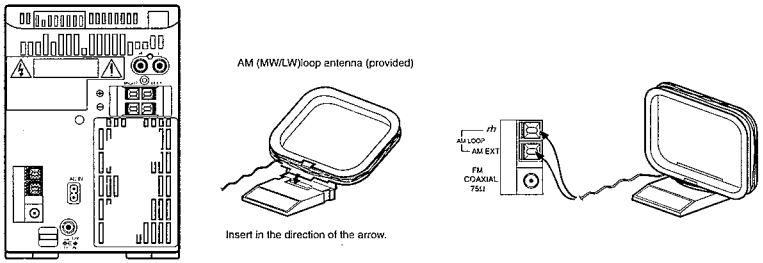

- Keep the loop antenna away from the unit and install it so that the best reception is obtained. (Do not leave the antenna wire in a bundle.)

- FM antenna connections and adjustments

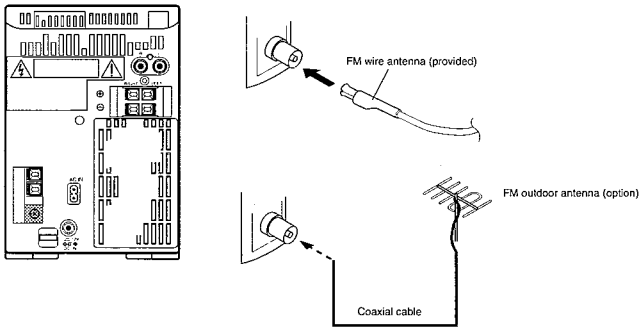

- Use an outdoor antenna when stable reception cannot be obtained with the provided antenna.

Notes:
- Do not place the loop antenna on a metal desk or near a TV or personal computer.
- Installing an outdoor antenna requires expertise; we recommend that you consult an audio dealer.
- Install the antenna cord away from the power and speaker cords as these could generate noise. Do not install the loop antenna so that it touches the rear of the unit.

Speaker cord connection

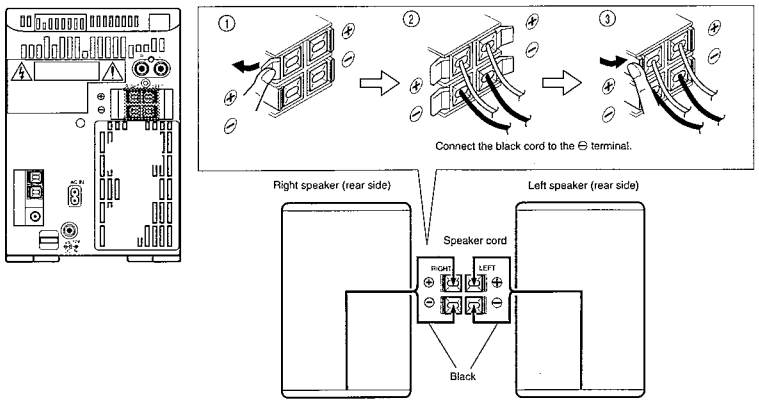

- Connec the cord from the speaker on the left to the (LEFT) terminal and the cord from the speaker on the right to the (RIGHT) terminals.

- The speaker grilles can be removed.
- When removing.
  1. Insert your fingers at the top and pull towards you.
  2. Also pull the bottom towards you.

- Attaching the speaker grille

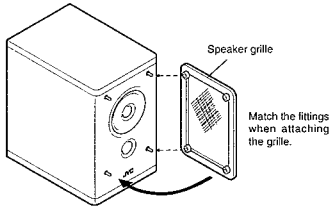

Notes:
- The polarity of the two connected speakers will be the same if the black speaker cords are connected to the ⊖ terminals. If the speakers are connected with polarities reversed, stereo effect and tone will be degraded.
- The speakers of this unit are not magnetically shielded. When they are placed directly on or adjacent to a TV, the TV's picture could be distorted. Install the speakers more than 20 cm away from your TV.
- When connecting the speaker cord make sure that the wire core, not the insulating cover, is connected to the speaker terminal. Otherwise, sound cannot be heard.

Connection of external audio units

- **Connection with a turntable (or MD player)**

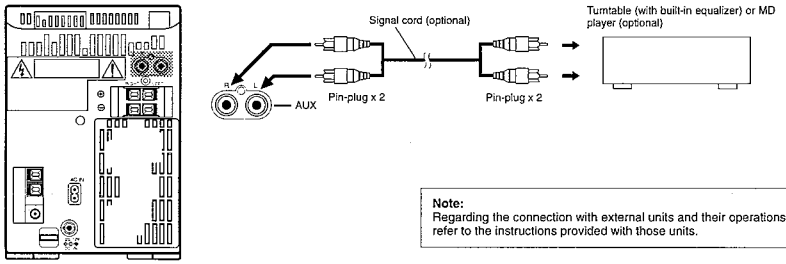

Note:
Regarding the connection with external units and their operations, refer to the instructions provided with those units.

POWER SUPPLY

A. Connection of AC power cord

- Connect the AC power cord after all other connections have been made.

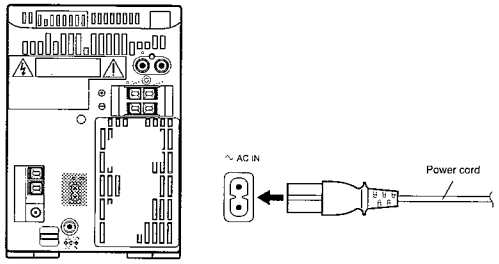

CAUTIONS:
1. **ONLY USE WITH JVC POWER CORD PROVIDED WITH THIS UNIT TO AVOID MALFUNCTION OR DAMAGE TO THE UNIT.**
2. **BE SURE TO UNPLUG THE POWER CORD FROM THE OUTLET WHEN GOING OUT OR WHEN THE UNIT IS NOT IN USE FOR AN EXTENDED PERIOD OF TIME.**

B. Operation on car battery (DC 12 V)

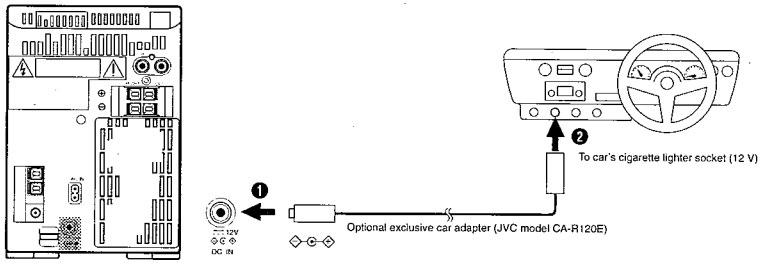

- First connect the car adapter to the DC IN 12 V jack, not the cigarette lighter socket, because shorting of a plug on the car may cause the fuse to blow out. In addition, be careful not to make a short-circuit between the plugs.
- **When using a car battery, be sure to use the specified car adapter (JVC model CA-R120E) to prevent mishaps or damage resulting from different polarity design.**

Note:
- When there is a power failure or the AC power cord is disconnected, the timer/clock setting is erased from memory. Reset the clock when the power supply is restored.

NAMES OF PARTS AND THEIR FUNCTIONS

CD player/General section

Front

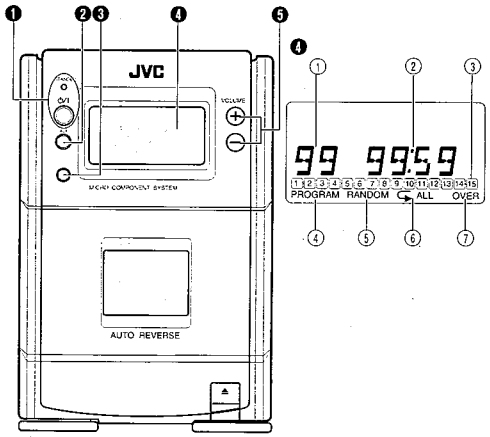

Top

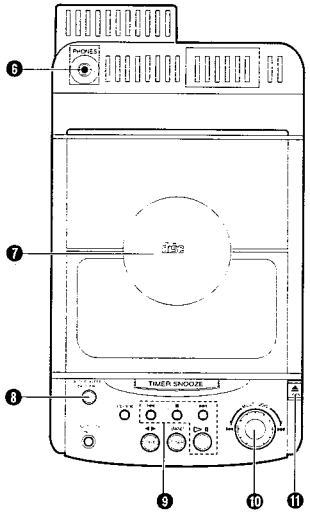

❶ ⏻/I button and power STANDBY indicator
❷ AUX button
❸ Remote sensor section
❹ Display window
① Function/Track number display
② Play time display
③ Music calendar display
④ Program mode indicator (PROGRAM)
⑤ RANDOM play indicator
⑥ Repeat play indicator (⇄ ALL)
⑦ OVER indicator
❺ VOLUME buttons
+: Use to increase the volume.
- : Use to decrease the volume.
(Control range from VOL. 0 to VOL. 50.)
❻ Headphones jack (PHONES) (3.5 mm dia. stereo mini)
Connect headphones (impedance 16Ω to 1kΩ) to this jack. Speaker sound is automatically switched off when the headphones are connected.
❼ CD holder
❽ ACTIVE HYPER BASS PRO button
❾ CD operations buttons
CD search buttons (⏮, ⏭):
Press to locate the beginning of a track and to start forward/reverse search operations.
Stop button (■):
Press to stop playing a CD.
CD play/pause button (▶/❚❚):
Press to play a CD or to stop temporarily.
❿ MULTI JOG dial
When the function is CD and the dial is turned, the beginning of a track can be searched. (1 track is selected by 2 clicks.)
⓫ CD holder OPEN (⏏) button

Tuner/Deck section

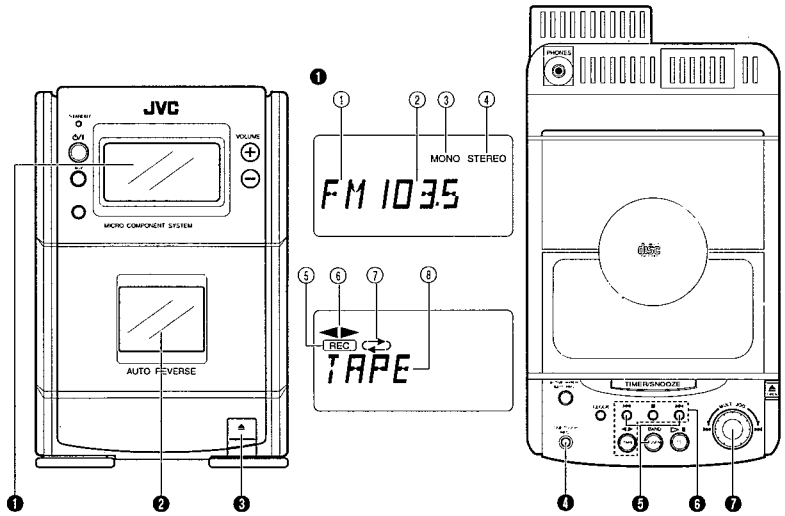

❶ Display window
① Band indicator
② Radio frequency display
③ MONO indicator
④ STEREO indicator
⑤ Recording indicator (REC)
⑥ Tape direction indicator (◄, ►)
⑦ Reverse mode indicator (⇄/⇄/⇄)
⑧ Tape (TAPE) mode display
❷ Cassette holder
❸ Cassette holder eject (▲) button
❹ ONE TOUCH REC button
❺ TUNER/BAND button
Press to select tuner mode.
Press to select the band.
Tuning buttons (|◄◄/►►|)

❻ Cassette operation buttons
|◄◄: Press to rewind the tape.
■: Press to stop the tape.
►►|: Press to fast wind the tape.
TAPE (◄►): Press to select the TAPE mode.
: Press to play back the tape in the forward direction.
The ► indicator lights in the display window.
: Press to play back the tape in the reverse direction.
The ◄ indicator lights in the display window.
❼ MULTI JOG Dial
The preset station can be selected. (1 station is selected by 2 clicks.)

REMOTE CONTROL UNIT

Preparation before use

- **Installing batteries in the remote control unit**

1. Remove the battery cover from the back of the remote control unit.
2. Insert two "R6/AA (15F)" size batteries.
   - Insert the batteries with the ⊕ and ⊖ terminals matching the indication inside the battery compartment.
3. Replace the cover.

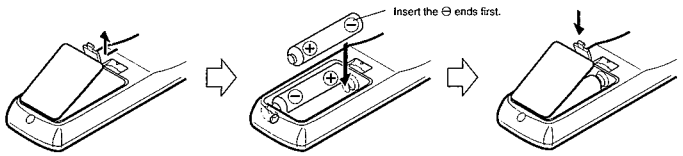

- **Battery replacement**
  When the remote control operation becomes unstable or the distance from which remote control is possible decreases, replace the batteries.

Using the remote control unit

- Point at the remote sensor and operate within about 7 m (approx. 23 ft).
- The remote control range is less when the unit is used at an angle.
- Do not expose the remote sensor to strong direct sunlight or artificial lighting.
- Make sure that there are no obstacles between the remote sensor and the unit.

The following operations can be performed using the remote control unit.

- **Check the operation button functions carefully and operate them correctly.**

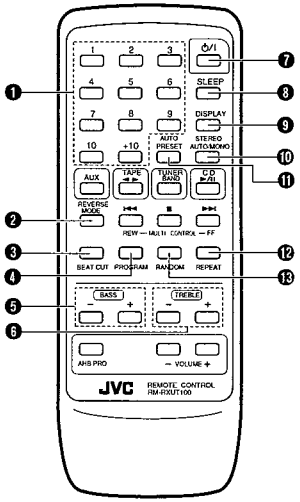

❶ Track number buttons (No. 1 to No. 10. +10)
Press station buttons (No. 1 to No. 10. +10)
❷ REVERSE MODE button
⇄ : For signal-side recording or playback.
⇄ : For recording or playback on both sides.
⇄ : For continuous play.
❸ BEAT CUT button
❹ PROGRAM button
❺ BASS buttons (+, -)
(Control range from -6 to 6.)
❻ TREBLE buttons (+. -)
(Control range from -6 to 6.)
❼ ⏻/I button.
❽ SLEEP button
❾ DISPLAY button
Use to display the current time.
❿ STEREO AUTO/MONO button
⓫ AUTO PRESET botton
⓬ REPEAT button
⓭ RANDOM button

- **Buttons not mentioned here have the same functions as those on the main unit.**

SWITCHING THE POWER ON/OFF

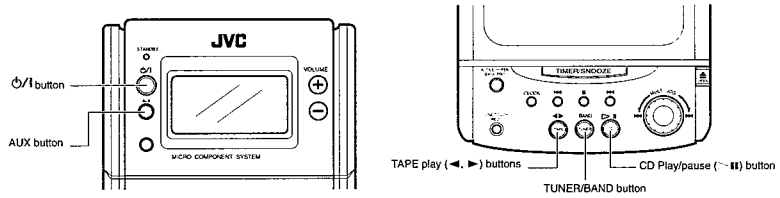

Switching the power on/off

- Switching on:

The STANDBY indicator goes out.	• The indicator in the display window lights.

- Switching off:

The STANDBY indicator lights.	• The indicator in the display window goes out and only the clock is indicated.

One touch operation (COMPU PLAY)

Even when the power is set to STANDBY, pressing the button shown below switches on the power and selects the source.

	Function mode	Operations
▷II CD	CD	When this button is pressed with a CD loaded, CD playback begins.
◄► TAPE	TAPE	When this button is pressed with a tape loaded, tape playback begins.
BAND TUNER	TUNER	When this button is pressed, the tuner is engaged.
AUX	AUX	A sound source connected to the AUX terminal can be engaged.

Notes:
- When switching off the power, be sure to press the ⏻/I button.
- The COMPU PLAY function the remote control has the same function as that on the main unit.

VOLUME, TONE AND OTHER CONTROLS

VOLUME buttons
+ : Use to increase the volume.
– : Use to decrease the volume.
(Control range from VOLUME 0 to VOLUME 50.)

BASS/TREBLE buttons (using the remote control unit)
To set the bass or treble level, press the corresponding button. The level setting ranges from –6 to 6.

ACTIVE HYPER-BASS PRO button
ON: The BASS indicator lights up. Set to this position to activate ACTIVE HYPER-BASS PRO sound.
OFF: The BASS indicator goes out. Set to this position when ACTIVE HYPER-BASS PRO sound is not required.

HANDLING CDs

Since dirty, damaged and warped CDs may damage the unit, take care regarding the following:

1. **Usable CDs**
   Use CDs with the mark shown.
2. **Notes on handling CDs**
   - Do not touch the reflective recorded surface.
   - Do not stick or write anything on the label side.
   - Do not bend CDs
3. **Storage**
   - After removing a CD from the unit, be sure to put it back in its case.
   - Do not expose CDs to direct sunlight, high temperatures from a heater, etc., high humidity, or dust.
4. **Cleaning CDs**
   - Before loading a CD, wipe off any dust, dirt or fingerprints with a soft cloth. CDs should be cleaned by wiping radially from the center to the edge.

- **Never use thinner, benzine, record cleaner or antistatic spray.**

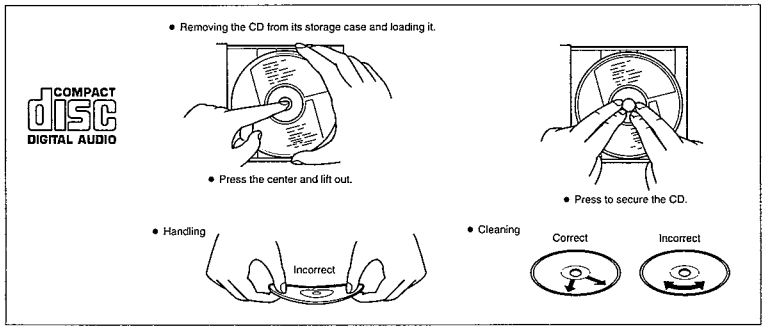

PLAYING CDs

Playing an entire CD
The following example of playing an entire CD assumes a CD with 12 tracks and a total playing time of 48 minutes 57 seconds.

Operate in the order shown

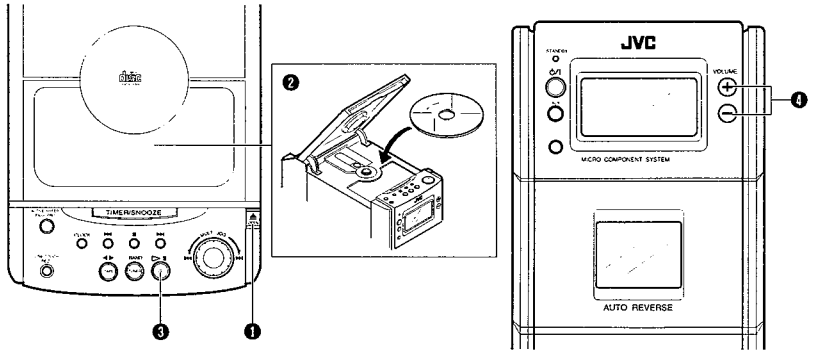

❶ Press to open the CD holder.
❷ Load a CD with the label side facing up and close the CD holder.
❸ Press to start play. (The power is switched on.)
❹ Adjust.

- As tracks are played, their track numbers go out one by one.

- 8-cm (3") CDs can be used in this unit without an adapter.

- **To stop in the middle of a CD**
  During play, press the stop/clear (■) button to stop play.

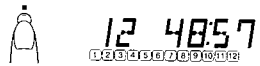

- The total number of tracks and total playback time are displayed.

- **To stop a CD temporarily**
  Press the ►/II button to stop play temporarily and the playing time display blinks.
  When pressed again, play resumes from the point where it was paused.

Caution:
- To change CDs, press the stop/clear (■) button; check that the CD has stopped rotating completely before unloading it.

Notes:
- When no CD is loaded, "NO DISC" is indicated in the display window. This indication may also appear when a CD is loaded upside down.
- The following indication may appear when a CD is dirty or scratched, or when the CD is loaded upside down.
  In such a case, check the CD and insert again after cleaning the CD or turning it over.

- **Do not use the unit at excessively high or low temperatures. The recommended temperature range is from 5°C (41°F) to 35°C (95°F).**
- After play, unload the CD.
- If mistracking occurs during play, lower the volume.

Skip play

- During play, it is possible to skip forward to the beginning of the next track or back to the beginning of the track being played or the previous track; when the beginning of the required track has been located, play starts automatically.

To listen to the next track...
Press the ►►I button once to skip to the beginning of the next track.

To listen to the previous track...
Press the I◄◄ button to skip to the beginning of the track being played. Press twice quickly to skip to the beginning of the previous track.

- By using the MULTI JOG dial, the beginning of tracks can be searched and played.

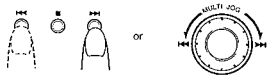

Search play (to locate the required position on the CD)

- The required position can be located using fast-forward or reverse search while playing a CD.

- Hold down the button; search play starts slowly and then gradually increases in speed.
- Since low-volume sound (at about one quarter of the normal level) can be heard in the search mode, monitor the sound and release the button when the required position is located.

Direct access play (using the remote control unit)

- Pressing any of the track number buttons will start play from the beginning of the designated track. (This function cannot be used during programmed play.)

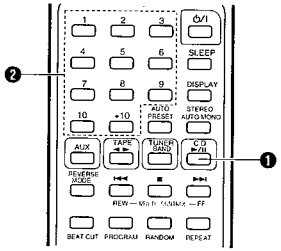

❶ Press the CD ►/II button to set to the CD mode.
❷ Designate the required track using the track number buttons.
- To designate track numbers 1 to 10, press the track number button corresponding to the track number.
- To designate track number 11 or higher, press the +10 button the required number of times, then a track number button. (Example: To designate the 20th track, press the +10 button once, then press track number button 10.)
- +10 button:
  Each time this button is pressed, the number increases by 10. First press this button to set the 10's digit, then press the track number button to set the 1's digit.

- **To skip to another track during play**
  When the required track number button is pressed, the display shows the designated track number and play starts from the beginning of the designated track.

Programmed play (using the remote control unit)

- Up to 20 tracks can be programmed to be played in any required order. The total playing time of programmed tracks is displayed (up to 99 minutes, 59 seconds).
  (Example: When programming the 2nd track to be played first, and the 6th track next, then the 12th track, etc.)

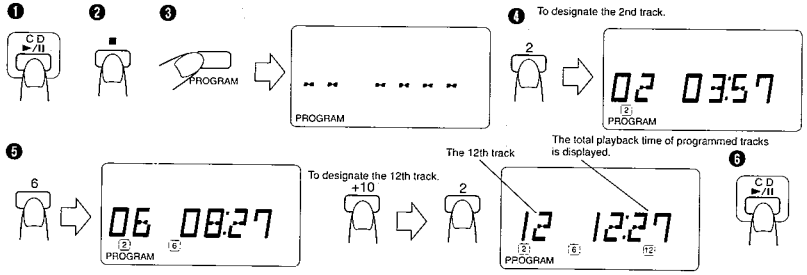

❶ Press the CD ►/II button to set to the CD mode.
❷ Press the ■ button.
❸ Press the PROGRAM button to set to the programming mode.
❹ Press to designate the required track number.
❺ Designate the remaining tracks by pressing the track number buttons.
❻ Press the ►/II button when programming is completed. Programmed play starts.

To confirm the details of a program...
Press the PROGRAM button; the tracks making up the program will be displayed in programmed order.

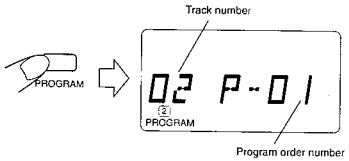

To clear the programmed tracks...
Press the ■ button before playing a CD. During programmed play, press this button twice. When the CD holder is opened, programmed tracks are cleared automatically.

Notes:
- If the total playing time of the programmed tracks exceeds 99 minutes 59 seconds, the total playing time indication will go out.
- When programming a track number higher than 21 on a disc containing more than 21 tracks, the total playback time of all the programmed tracks will not be displayed.
- When a disc with 16 or more tracks is loaded, the "OVER" indicator will appear.

Repeat play (using the remote control unit)

Press the REPEAT button before or during play. A single track or all the tracks can be repeated.

Whether a single track or all tracks are to be repeated can be specified. Each time the REPEAT button is pressed, the mode will change from a single track (⊂), to all the tracks (⊂ ALL), to the clear mode, in this order.

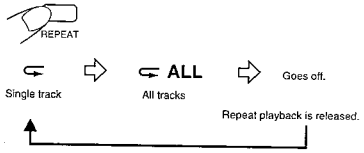

- **Single track repeat (⊂)**
  The current or specified track will be played repeatedly.
- **All tracks repeat (⊂ ALL)**
  All tracks or the programmed tracks of a CD will be played repeatedly.

Random play (using the remote control unit)

Press the RANDOM button, and all tracks on a CD play once in random order.

HANDLING CASSETTE TAPES

Cassette tapes
1. Loose tape may cause trouble. Using a pencil or like object, gently tighten the tape as shown.
2. To prevent recordings from being erased accidentally, remove the tab(s) with a screwdriver, etc. Reseal the slots with adhesive tape to erase and re-record after the tabs have been removed.
3. C-120 cassettes are not recommended because they are prone to malfunction.

Cassette loading
1. Press the eject (⏏) button to open the cassette holder.
2. Load a cassette as shown.
3. Close the cassette holder by pressing it gently. Listen for the click indicating that the holder is securely shut.

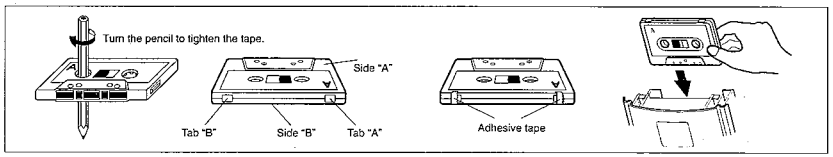

Note:
If the power is switched off while tape is running, it may be impossible to remove the cassette. If this happens, switch the power on again before attempting to remove the cassette.

Auto tape select mechanism
This unit has an Auto Tape Select mechanism which distinguishes between different types of tape using detection holes in the cassette. After the type of tape has been detected, bias and equalization suitable for the tape are set.

- Cassettes with detection holes:
  Metal tape (EQ: 70 µs) ..... Type IV
  CrO_2 (chrome) tape (EQ: 70 µs) ..... Type II
- Cassettes without detection holes:
  Normal tape (EQ: 120 µs) ..... Type I

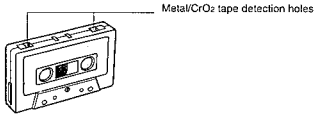

CASSETTE PLAYBACK

Operate in the order shown

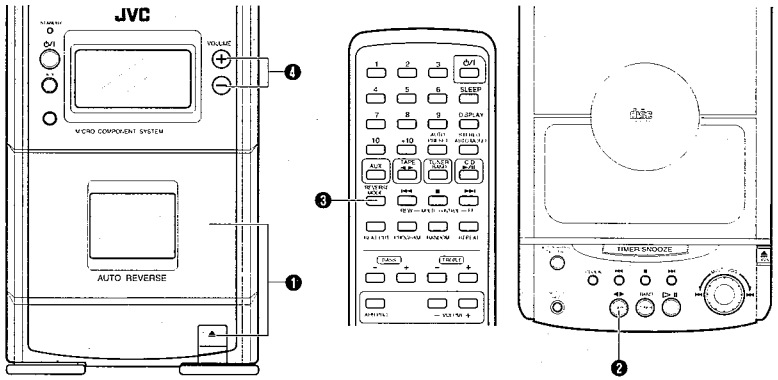

❶ Load a cassette tape.
❷ Press to start playback. (The power is switched on and the TAPE mode is engaged to start tape playback.)
❸ Select the reverse mode (⇄ / ⇄ / (⇄)).
❹ Adjust.

- After loading a cassette tape, simply press the TAPE ◄► button. The power is switched on and the tape starts playback. (To select the playback direction, press the TAPE ◄► button. The change in direction can be checked in the tape direction indicator (◄ or ►).)

- When the tape plays back with the reverse mode set to ⇄ (single side play) or ⇄ (both side play) mode, the tape stops automatically at the end of tape after playing one or both sides. When the reverse mode is set to the (⇄) (continuous play) mode, the tape continuously plays one side after the other until you stop operation.

How to fast-wind tapes

1. Press the TAPE (◄►) button (to set TAPE mode).
2. Press the ⏮ or ⏭ button.
   - A tape can be fast-wound in either tape playback direction, and when it reaches the end of a side, it stops automatically.

RADIO RECEPTION

Operate in the order shown

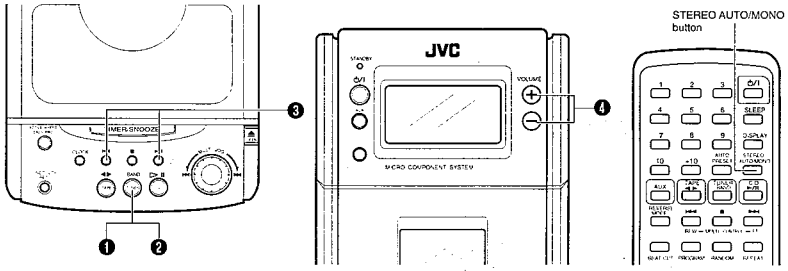

❶ Press the TUNER/BAND button.
   - The power is switched on and a band and radio frequency will be shown in the display.
❷ Select the band.
❸ Tune to the required station.
❹ Adjust.

STEREO AUTO/MONO button (using the remote control unit)

Auto mode:
Set to this position when listening to or recording an FM stereo broadcast. The STEREO indicator lights when the FM stereo broadcast is received.
MONO:
Set to this position when FM stereo reception is noisy.
When another station is tuned to in the MONO mode, the unit automatically enters Auto mode.

Seek tuning

Press the ⏮ or ⏭ button for one second or more. The unit enters the seek tuning mode to tune in the nearest station automatically, so the broadcast can be heard. In AM operation, the frequency moves continuously from the MW to the LW band and vice versa.

Manual tuning

Each time the ⏮ or ⏭ button is pressed, the unit steps through the current frequency band. Tuning is done in steps of 50 kHz for FM and 9 kHz for AM (MW/LW).
In AM operation, the tuned frequency moves continuously from the MW (522-1,629 kHz) to the LW (144-288 kHz) band and vice versa.

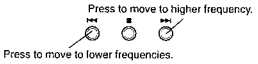

Notes:
- When seek tuning to the required station is not possible because the broadcast signal is too weak, press the ⏮ or ⏭ button momentarily to perform manual tuning.
- When the power is set to STANDBY, or another mode (TAPE, CD or AUX) is selected, the last tuned frequency is stored in memory. When the power is switched on again and TUNER/BAND button is pressed, the same station will be tuned to.

Auto preset tuning (using the remote control unit)

This function scans the current band, detecting frequencies used to broadcast signals, and stores the first 30 FM frequencies and 15 AM (MW/LW) frequencies in memory automatically.
- Press the AUTO PRESET button for more than 2 seconds. The frequencies of stations broadcasting signals can be stored in memory automatically in the order of increasing frequency. (30 stations in FM band and 15 stations in AM (MW/LW) band.)

Presetting stations (using the remote control unit)

30 stations in FM band and 15 stations in AM (MW/LW) band can be preset as follows:
- Example: (Presetting an FM station broadcasting on 103.5 MHz to preset button "15")

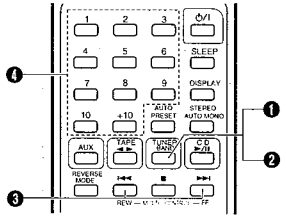

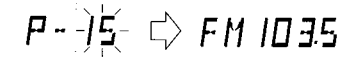

❶ Press the TUNER/BAND button.
❷ Select the FM band using the TUNER/BAND button.
❸ Tune to the required station.
❹ Press preset button "+10", then "5" for more than 2 sec.
(When "15" blinks in the preset station display, the station has been stored.)

- Repeat the above procedure for each of the other stations, using a different preset button each time.
- Repeat the above procedure for the other band.

- **To change preset stations**
  Perform step ❹ above after tuning to the required station.

Notes:
- The previous stored station is erased when a new station is stored, because the new station's frequency replaces the previous frequency in memory.
- When listening to an AM (MW/LW) broadcast, noise may be heard if the remote control unit is used.

- All preset stations will be erased when the power cord is disconnected or a power failure occurs for more than 24 hours. In such cases, store the stations again.

Using the antennas (see page 5)
FM: Connect the provided FM wire antenna.
AM (MW/LW): Adjust the position of AM (MW/LW) loop antenna.

Preset tuning

- The stations must be preset before this operation can be performed.

(Using the main unit)
① Press the TUNER/BAND button.
② Select the band using the TUNER/BAND button.
③ To select the requied preset station, turn the MULTI JOG dial.

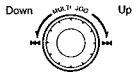

(Using the remote control unit)
① Press the TUNER/BAND button.
② Select the band using the TUNER/BAND button.
③ Press the required preset station buttons (No. 1 – No. 10 and +10).
- The preset station number and frequency corresponding to the button pressed are shown.

RECORDING

- During recording, the ALC (Automatic Level Control) circuit automatically optimizes the recording level, so manual recording level adjustment is unnecessary.
- Check that the safety tab on the cassette tape is not broken off.

Note:
This unit has recording characteristics suitable for normal and CrO_2 tapes. Normal and CrO_2 tapes have different characteristics from metal tapes.

Synchronized recording with the CD player

- In this system, the CD player starts play when the cassette deck enters the recording mode.

Operate in the order shown

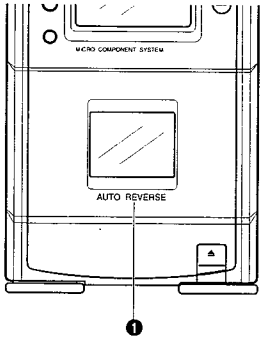

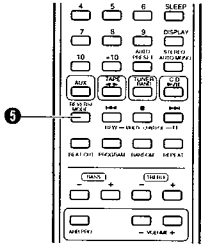

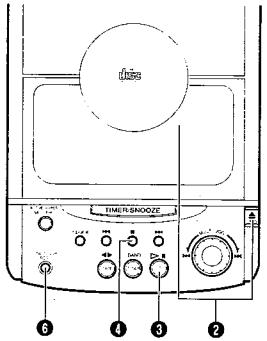

❶ Load a cassette with side A facing out. (Wind past the tape leader before starting recording.)
❷ Load a CD and close the CD holder.
❸ Set to the CD mode.
❹ Press the ■ button to set stop mode.
❺ Select the required reverse mode (⇄ or ⇄).
- When programmed play is required, program the required tracks using the remote control. (See page 14.)
- Select tracks with a total playing time which does not exceed the tape length.

❻ Press the ONE TOUCH REC button; synchronized recording will start. (The recording indicator lights up.)

- Recording starts in the forward direction and CD play starts automatically.
- After the CD player has played the entire CD or programmed tracks, the deck stops automatically.

- Non-recorded sections of approx. 4 seconds are automatically left between tunes
- To stop recording in the middle, press the ■ button. The cassette deck also stops after 4 seconds.

Note:
- During CD synchro recording, the ▷/II, SEARCH (⏮, ⏭) buttons and MULTI JOG dial do not function.

When non-recorded section between tunes is not required ...
① Press the ▷/II button twice. The CD Player enters the pause mode.
② Press the ONE TOUCH REC button to start recording.

Note:
- Depending on the CD used, non-recorded sections of different lengths may be left between tunes

- **CD complete recording function (Synchro recording mode only)**
  If the tape is reversed while a CD is being played, recording will be done on the reverse side of the tape as follows:
  - When less than 12 seconds of the last tune on the forward side of the tape have been recorded, recording on the other side of the tape will start from the beginning of the previous track.
  - When more than 12 seconds of the last tune on the forward side of the tape have been recorded, recording on the other side of the tape will start from the beginning of the current track.

- **To record one track**
  Play the track to be recorded. Then pressing the ONE TOUCH REC button locates the beginning of the track and enter the one track recording mode. After the recording is finished, the CD player and cassette deck both stop.

Recording from the radio or an external source connected to the AUX terminals

Operate in the order shown

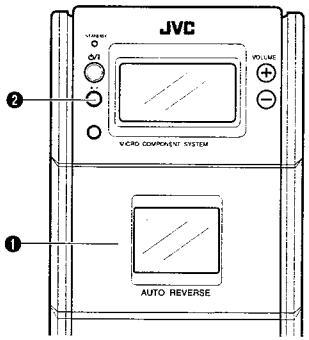

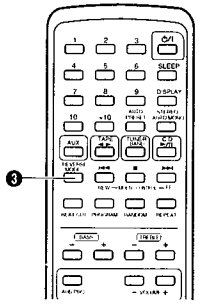

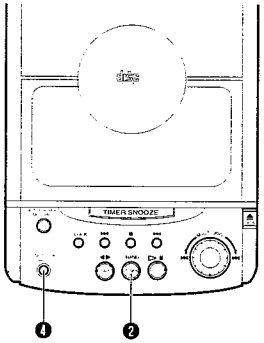

❶ Load a cassette with side A facing out.
(Wind past the tape leader before starting recording.)
❷ Select the source to be recorded.
TUNER: Press the TUNER/BAND button. Tune to the required station.
AUX: Press the AUX button.
❸ Select the required reverse mode (⇄ or ⇄).
❹ Press the ONE TOUCH REC button.

BEAT CUT button (using the remote control unit)

When recording an AM broadcast, beats may be produced which are not heard when listening to the broadcast. In such case, set this button after setting the deck to the record mode so that the beats are eliminated. Normally set this button to "CUT-1".

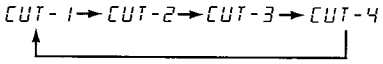

Erasing

A recorded tape can be erased by recording new material over the previous material.

To erase a tape without making a new recording...
1. Press the TAPE (◀▶) button to set to the TAPE mode.
2. Press the ■ button.
3. Insert the cassette with the side to be erased facing out.
4. Press the ONE TOUCH REC button.

It should be noted that it may be unlawful to re-record pre-recorded tapes, records, or discs without the consent of the owner of copyright in the sound or video recording, broadcast or cable programme and in any literary, dramatic, musical, or artistic work embodied therein.

CLOCK ADJUSTMENT

Names of parts in the clock/timer section, and their functions:

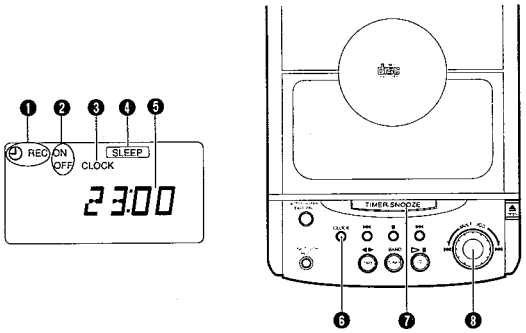

❶ Timer mode indicator
❷ Timer indicator (ON/OFF)
❸ CLOCK indicator
❹ SLEEP indicator
❺ Time display

❻ CLOCK button
❼ TIMER/SNOOZE button
❽ MULTI JOG dial
It is used to set the current time and perform timer setting.

Setting the current time (when this unit is used for the first time)

(Example: To set the clock to 13:15.)

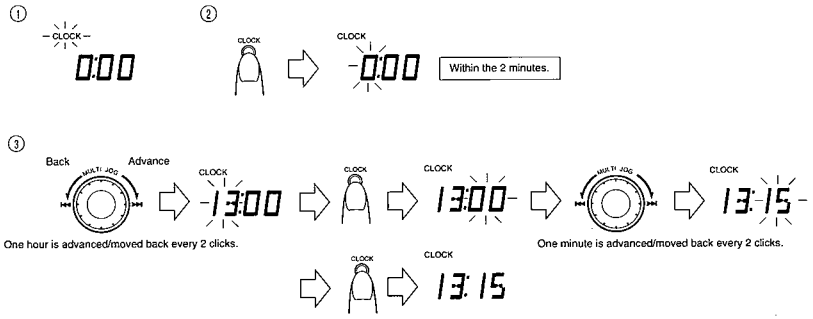

① Connect the AC power cord; "CLOCK" will blink in the display.
② Press the CLOCK button for 2 seconds or more.
③ Set to 13: 15 using the MULTI JOG Dial and CLOCK button.

- Setting the current time.
  Use the time signal of television and radio broadcasts.
  When adjusting the clock, follow steps ② - ③.

Notes:
- Before performing timer recording or playback, it is necessary to set the current time.
- It is recommended to set the current time with the ⏻/I button set to STANDBY so that the current display mode is maintained.
- When the power cord is plugged in again after being disconnected or power is restored after a power failure, "CLOCK" will blink in the display. Set the current time again.

TIMER OPERATIONS

Setting the timer

- The current time must be set before the timer can be used.

❶ Press the TIMER/SNOOZE button for 2 seconds or more.

❷ Set the start time.
(Example: To set the timer to 12: 15.)

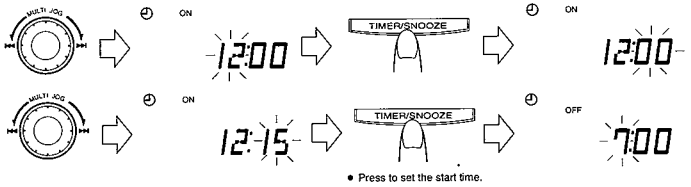

❸ Set the stop time.
(Example: To set the timer stop timer to 13: 15.)

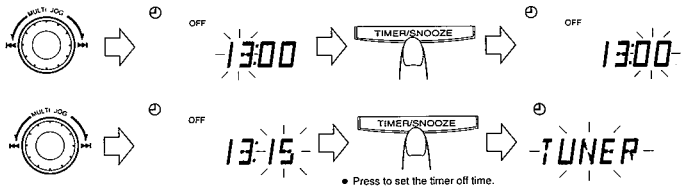

❹ Select the TIMER mode
- The selected TIMER mode is shown in the display.

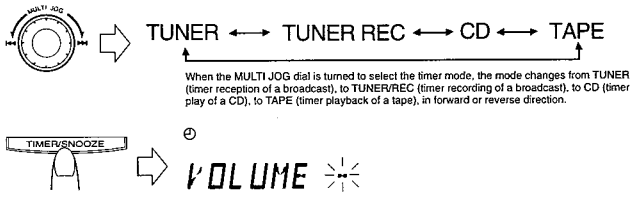

❺ Set the volume.

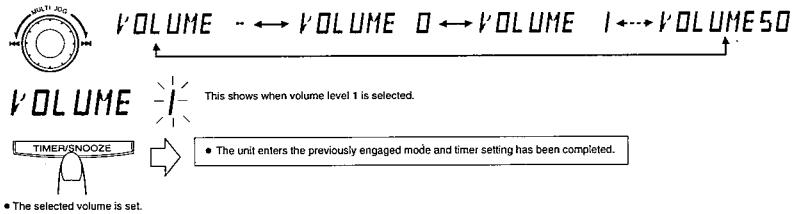

- When the volume setting is set to "VOLUME -" (volume level is not specified), the timer playback volume is at the level used before setting the timer.

- **To confirm the timer setting**

1. When (⏲) is displayed...
   Press the TIMER/SNOOZE button for more than 2 seconds. (⏲) disappears.
2. Press the TIMER/SNOOZE button for more than 2 seconds once again.
   Then each time the TIMER/SNOOZE button is pressed the timer setting can be confirmed. When the previous function mode is restored, showing that the timer setting has been completed.

Note:
- When the timer is set incorrectly or the correct mode is not selected, perform "Setting the timer" from the beginning.

Timer recording of broadcast

- The current time must be set before the timer can be used.
- Make sure that the safety tabs of the cassette have not been broken off.

Operations

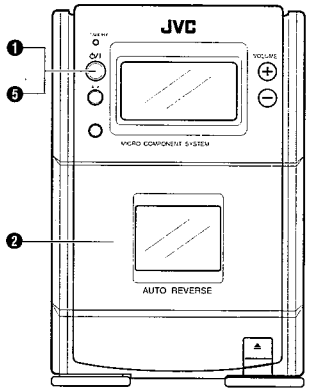

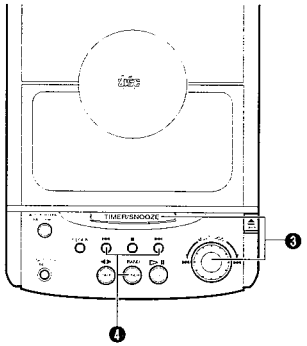

❶ Set the ⏻/I button to ON.
❷ Load a cassette.
- Insert the cassette with the side to be recorded facing out.
- Select the required reverse mode. (⇄ or ⇄)

❸ Set the timer. (Refer to "Setting the timer" on page 20.)
- Set the timer about a minute before the broadcast to be recorded is scheduled to start.

❹ Tune to the station to be recorded. (Refer to page 16.)
❺ Set the ⏻/I button to STANDBY.

- **Timer recording will start at timer start time and the power will be switched off at timer stop time.** (The timer mode is then released.)

- **To cancel timer operation**
  Press the TIMER/SNOOZE button for more than 2 seconds so that the timer mode indicator (⏲) goes out.

If you do this, timer recording will not start at the timer start time.

Notes:
Once the timer has been set, the start and stop times, etc., are stored in memory. When timer recording or playback is required at different times, the timer must be set again.
- After setting the timer start and stop times, check that the tuner is tuned to the required frequency.
- When the power cord is disconnected or there is a power failure, timer settings will be erased from memory. If this happens, set the current time and perform the timer setting again.

Timer playback

- Timer playback of tapes, broadcasts and CDs is possible.

Operations

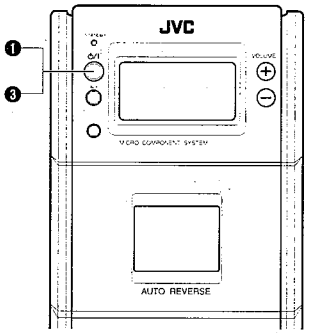

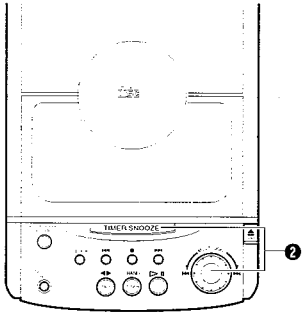

❶ Set the ⏻/I button to ON.
❷ Set the timer. (Refer to "Setting the timer" on page 20.)

Source sound	Timer mode	Operations
CD play	CD	Load a disc.
Tape playback	TAPE	Load a cassette tape.
Broadcast	TUNER	Tune to the required station.

❸ Set the ⏻/I button to STANDBY.

- Timer playback will start at the timer start time and the power will be switched off at the timer stop time.
  The unit remains in the same timer mode even after the power is switched off. The same timer function will repeat at the same time on the following day.
- When the power is switched on, it is possible to fade in the sound from volume level 0 (zero) to the preset volume.

- **To cancel timer operation**
  Press the TIMER/SNOOZE button for more than 2 seconds button so that the timer mode indicator (⏲) goes out.

Notes:
- When the volume setting is set to "VOLUME -" (volume level is not specified), the timer playback volume is set to the level used before setting the timer.
- To stop during timer playback, press the ⏻/I button to switch the unit off.

- **To get an extra 5 minutes of sleep....**
  When timer playback starts, press the TIMER/SNOOZE button. The power is switched off and timer playback restarts after 5 minutes (snooze function).

Sleep timer operations (using the remote control unit)

A. Use this when you want to fall asleep while listening to a tape, broadcast or CD.

① Set to the required source and tune (broadcast) or play back (CD or tape).
② Press the SLEEP button to set the sleep time.

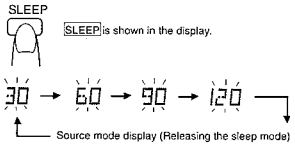

- Sleep time settings of 30, 60, 90 or 120 minutes can be set. When you release the SLEEP button, the source is displayed after 5 sec.

- The sleep timer operation will start and the power will be switched off after the specified time.
- **Checking the sleep time**
  When the SLEEP button is pressed, the remaining sleep time is displayed. If it is pressed again, a new sleep time can be set.
- **To cancel the sleep timer operation**
  Press the ⏻/I button to switch the power off or press the SLEEP button until the sleep time indicator disappears.

B. To fall asleep while listening to a tape, broadcast or CD and to perform timer playback the following morning

① Set the timer. (Refer to "Setting the timer" on page 20.)
② Set to the required source (broadcast, tape or CD).
③ Press the SLEEP button to set the sleep time.

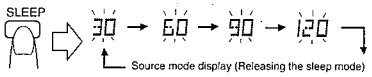

- Any source can be selected for sleep timer operation and timer playback. For example;
  - CD play for sleep timer operation and broadcast reception for timer playback.
  - Tape playback for sleep timer operation and CD play for timer playback.

However, when broadcast reception is selected for both sleep timer operation and timer playback, the station you heard at night will be tuned to the following morning.

MAINTENANCE

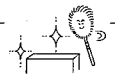

Cleaning is important!
When the tape is running, magnetic powder and dust naturally accumulate on the heads, capstan and pinch roller. When they become too dirty...
- Sound quality deteriorates.
- The output sound level drops.
- Previously recorded tape is not completely erased.
- Recording is not performed satisfactorily.

Therefore, you should clean the heads, etc. after every 10 hours of use for optimal recording conditions.

Cleaning the heads, capstan and pinch roller
Open the cassette holder.
Clean the heads, pinch roller and capstan.
For effective cleaning, use a cleaning kit available from an audio store.
After cleaning, be sure that the cleaning fluid has dried completely before loading a cassette.

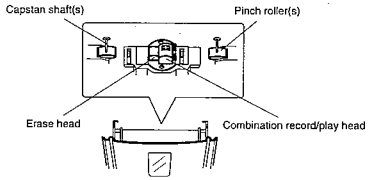

Cautions:
1. Keep magnets and metallic objects away from the head.
   If the head becomes magnetized, noise will increase and the sound will deteriorate. Demagnetize the head every 20-30 hours of use with a head eraser (available from an audio store). (When demagnetizing the head, the ⏻/I button should be set to STANDBY.)
2. Do not use anything other than alcohol for cleaning.
   Thinner and benzine will damage the rubber pinch roller.

Cleaning the lens
If the lens in the CD pickup is dirty, dropout, etc., could degrade sound.
Open the CD holder and clean the lens as shown.
- Use a blower (available from a camera store) to blow dust off the lens.
- If there are fingerprints, etc. on the lens, gently wipe clean with a cotton swab.

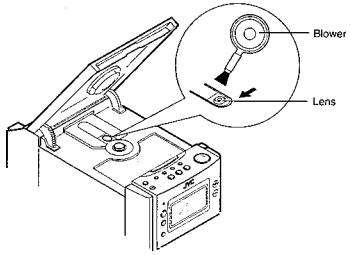

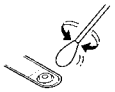

TROUBLESHOOTING

What appears to be trouble is not always serious. First make sure....

- **Power cannot be turned on.**
  * Is the power cord unplugged?
- **No sound from the speakers.**
  * Are headphones connected?

CD Player Section
- **The CD player does not play.**
  * Is the CD upside down?
  * Is the CD dirty?
- **A certain portion of the CD does not play correctly.**
  * Is the CD scratched?

Cassette Deck Section
- **Playback sound is at a very low level.**
  * Is the head dirty?
- **The ONE TOUCH REC button does not function.**
  * Have the safety tabs of the cassette been broken off?

Tuner Section
- **Reception is noisy.**
  * Try adjusting the antenna.

Timer Section
- **Timer operation does not start.**
  * Is the current time set correctly?
  * Is the timer mode (⏲) displayed?

Remote Control
- **Remote control is impossible.**
  * Are the batteries in the remote control exhausted?
  * Is the remote sensor section exposed to bright light (direct sunlight, etc.)?

Note:
Before making an important recording, be sure to make a test recording first to check that the deck, etc. is working correctly.

- **When the above remedies do not help**
  Many operations of this unit are performed by the control of a microprocessor. If none of the buttons function, unplug the power cord, wait for a while, then plug it back in. Reset the correct values for the clock and timer.

SPECIFICATIONS

CD player section

Type	: Compact disc player
Signal detection system	: Non-contact optical pickup
Number of channels	: 2 channels
Frequency response	: 20 Hz - 20,000 Hz
Signal-to-noise ratio	: 90 dB
Wow & flutter	: Less than measurable limit

Radio section

Frequency range	: FM 87.5-108 MHz AM (MW) 522-1,629 kHz AM (LW) 144-288 kHz
Antennas	: Loop antenna for AM (MW/LW) External antenna terminal for FM (75 Ω)

Tape deck section

Track system	: 4-track 2-channel stereo
Motor	: Electronic governor DC motor for capstan
Heads	: Hard permalloy head for recording/playback. 2 gap ferrite head for erasure (Combination head)
Frequency response	: 60-15,000 Hz (with CrO2 tape)
Wow & flutter	: 0.15% (WRMS)
Fast wind time	: Approx. 130 sec (C-60 cassette)

Speaker Section (each unit)

Speakers (Impedance)	: 8 cm (4 Ω).
Dimensions	: 131 (W) x 203 (H) x 194 (D) mm
Weight	: Approx. 1.6 kg

General

Power output	: 28 W (14 W + 14 W) at 4 Ω (Max.) 20 W (10 W + 10 W) at 4 Ω (10% THD)
Input terminals	: AUX IN (300 mV/47 kΩ)
Output terminals	: PHONES (Output level: 0-15 mW/ch, 32 Ω, Matching impedance: 16 Ω - 1 kΩ) SPEAKER (Matching impedance 4 Ω - 16 Ω)
Power requirements	: AC 230 V, 50 Hz Ext. DC 12V (car battery via optional CA - R120E car adapter)
Power consumption	: 35 W (with ⏻/I button ON) 2.8 W (with ⏻/I button STANDBY)
Dimensions	: 404 (W) x 209 (H) x 270 (D) mm, including knobs
Weight	: Approx. 6.5 kg
Accessories provided	: Power cord x 1 Remote control unit (RM-RXUT100) x 1 "R6/AA (15F)" batteries x 2 (for the remote control) FM wire antenna x 1 Loop antenna stand x 1

Design and specifications are subject to change without notice.

UX-T151/T150 | MICRO COMPONENT SYSTEM

JVC
VICTOR COMPANY OF JAPAN, LIMITED

EN

Printed in China
0398MNMOZKJSC

UX-T150/UX-T151

Removal of Main Parts

■ **Removing the panel**
(See Figs.1 and 2)

1. From behind the body, remove the seven screws ① retaining the rear panel (See Fig.1).
2. After turning the body upside down, remove the two screws ② retaining the rear panel (See Fig.2).
3. Take out the rear panel from behind the body.

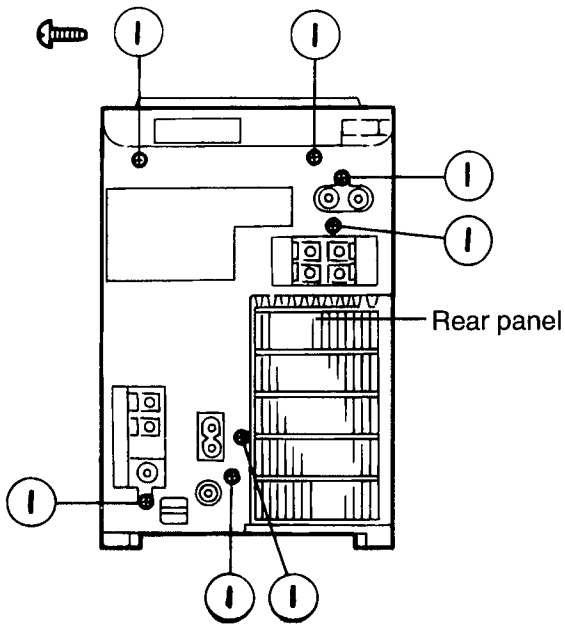

Fig. 1

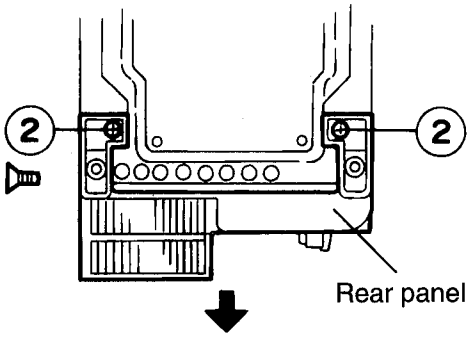

Fig. 2

■ **Removing the side panels (L and R)**
(See Figs, 3~6)

1. After turning the body upside down, remove the two screws ③ retaining the front cabinet assembly (See Fig. 3).
2. After turning the body back to its initial position, open the CD door while pressing the upper [OPEN/CLOSE] button (See Fig. 4).
3. While moving the side panel (L) in the arrow direction, remove the panel from the left side of the body (See Fig. 5).
4. While moving the side panel (R) in the arrow direction, remove this panel from the right side of the body (See Fig. 6).

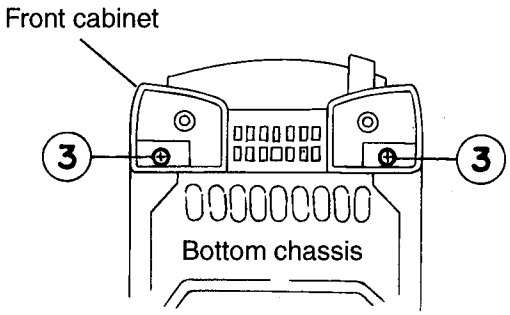

Fig.3

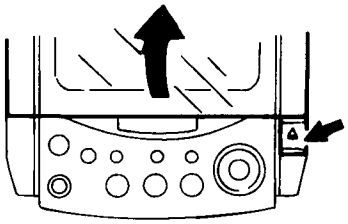

Fig. 4

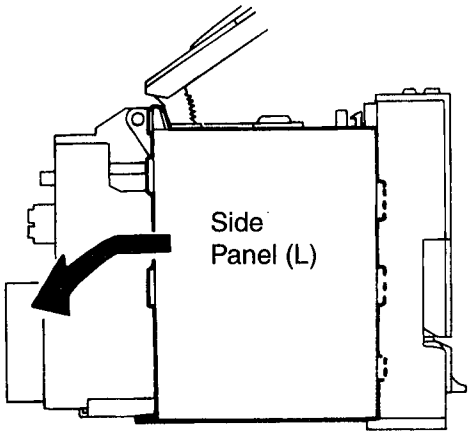

Fig. 5

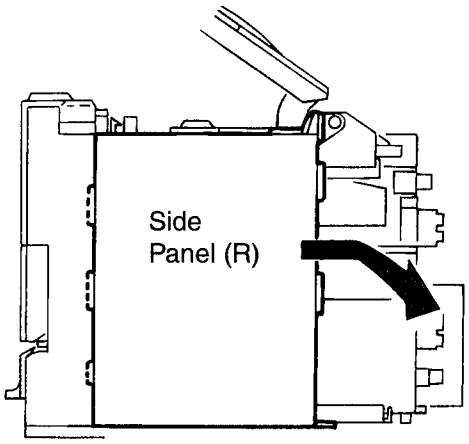

Fig. 6

■ Removing the CD player unit
(See Figs. 7 and 8)

1. Remove the rear panel.
2. Remove the left and right side panels.
3. From the connector CN603 on the CD servo control P.C. board, disconnect the card wire outgoing from the power amplifier P.C. board (See Fig. 11)
4. From the connector CN604 on the CD servo control P.C. board, disconnect the card wire outgoing from the connector CN766 on the LCD system CPU P.C. board. (See Fig. 11)
5. Disengage the left and right engagements ⓐ and ⓑ fixing the CD player unit by using a minus screw driver, etc. (See Figs. 11 and 12)

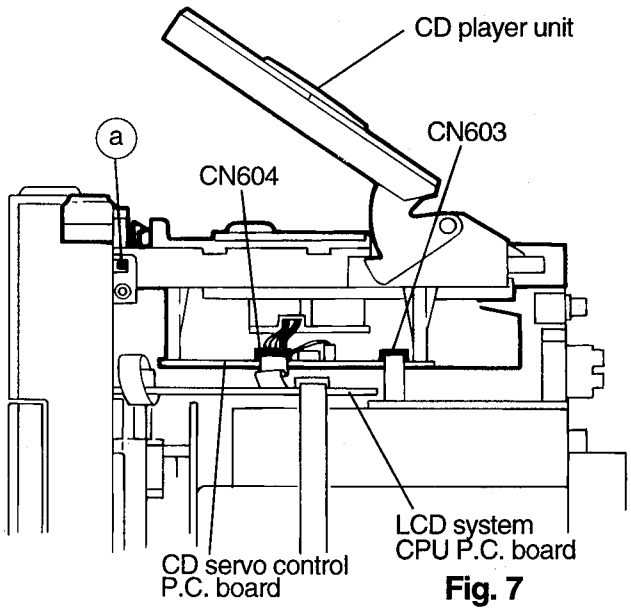

Fig. 7

■ Removing the Power amplifier P.C. board and Heat sink
(See Figs. 9 and 10)

1. Remove the rear panel.
2. Remove the left and right side panels.
3. Remove the CD player unit.
4. Remove the five screws ④ and ⑤ retaining the heat sink. (See Fig. 9)
5. From the connector CN303 on the power amplifier P.C. board, disconnect the card wire outgoing from the connector CN34 on the head amplifier & mechanism control P.C. board. (See Fig. 9)
6. From the connector CN901 on the power supply board, disconnect the connector wire out going from the connector W306 on the power amplifier P.C. board. (See Fig. 9)
7. Remove the one screw ⑥ retaining the power amplifier P.C. board. (See Fig. 10)
8. Remove the power amplifier P.C. board from the two connectors CN711 and CN712 on the LCD system CPU P.C. board. (See Fig. 9)
9. After removing the power amplifier P.C. board from the key way con the bottom chassis, take this P.C. board out while raising it in the arrow direction. (See Fig. 10)

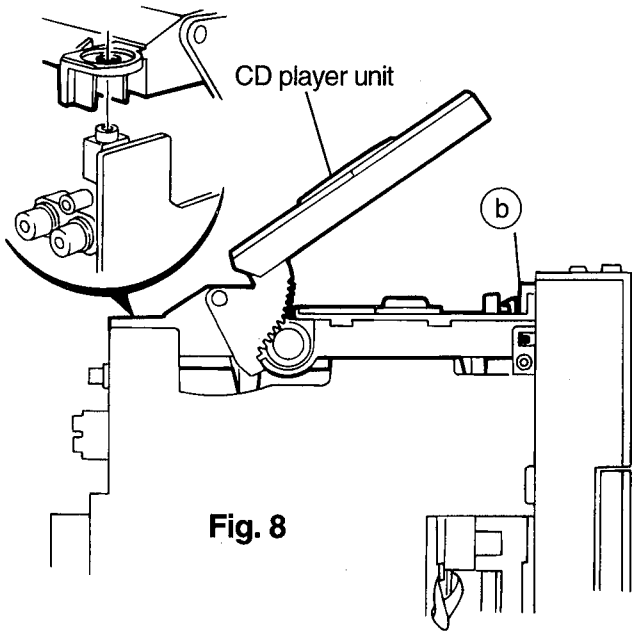

Fig. 8

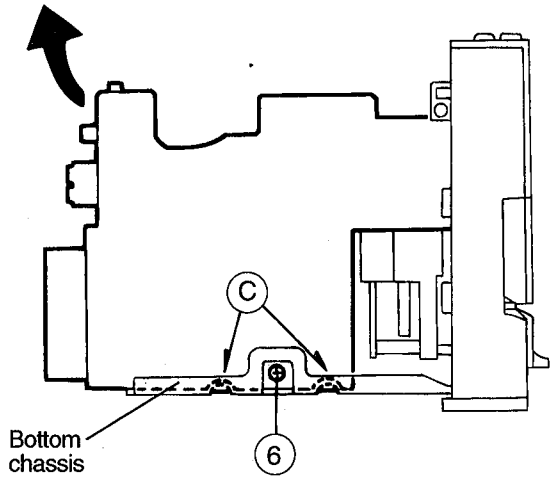

Fig. 10

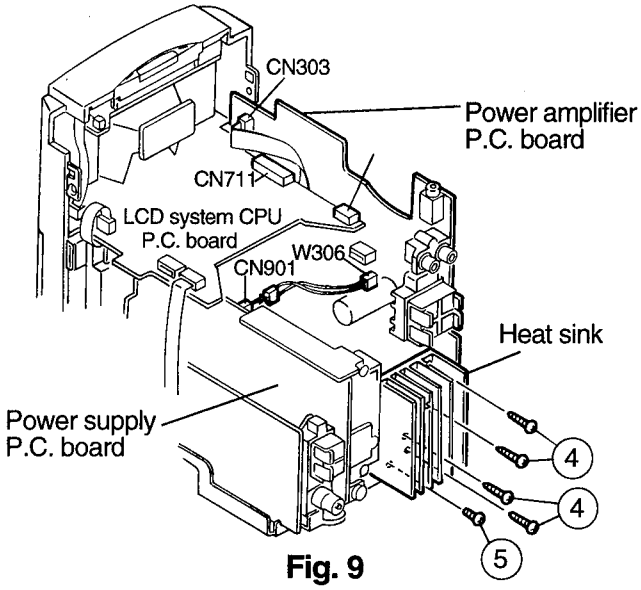

Fig. 9

■ Removing the tuner P.C. board
(See Fig. 11)

1. Remove the rear panel.
2. Remove the left and right side panels.
3. Remove the CD player unit.
4. From the right side of the body, remove the one screw ⑦ retaining the tuner P.C. board.
5. From connector CN1 on the P.C. board, disconnect the card wire outgoing from connector CN701 on the LCD system CPU P.C. board.

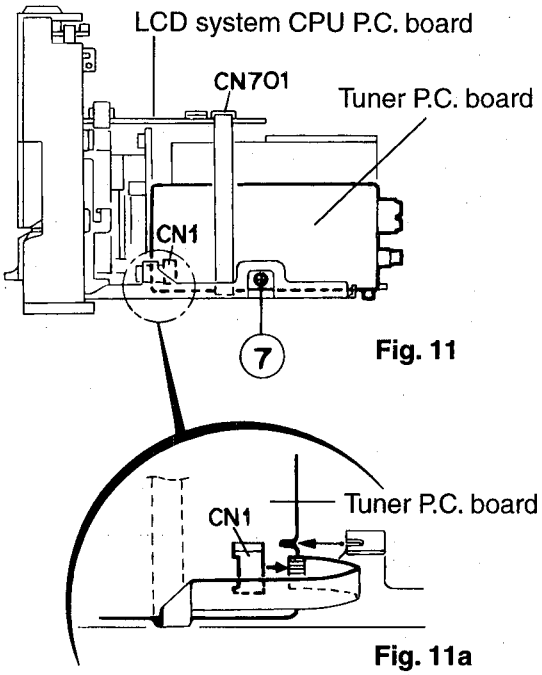

Fig. 11

Fig. 11a

■ Removing the front panel assembly
(See Fig. 12)

1. Remove the rear panel.
2. Remove the left and right side panels.
3. Remove the CD player unit.
4. Remove the power amplifier P.C. board and heat sink.
5. Remove the tuner P.C. board.
6. From the bottom of the body, disengage the engagement ⓓ fixing the front panel assembly in Fig. 12 while pressing it with a minus screw driver, etc.

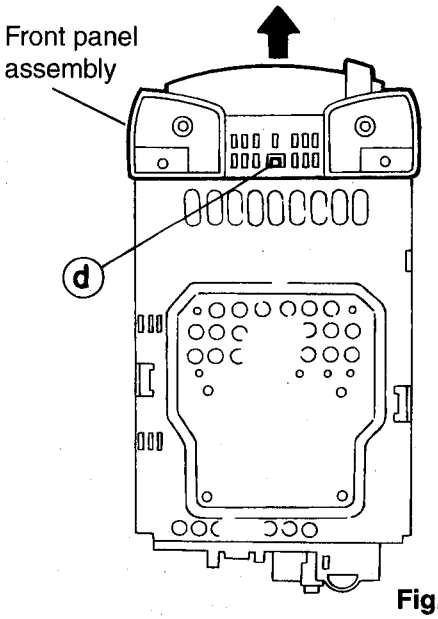

Fig. 12

■ Removing the power transformer and power supply P.C. board
(See Fig. 13)

1. Remove the rear panel.
2. Remove the left and right side panels.
3. Remove the CD player unit.
4. Remove the power amplifier P.C. board and heat sink.
5. Remove the tuner P.C. board.
6. Remove the four screws ⑧ retaining the power transformer and power supply P.C. board and the one screw ⑨ retaining the jack holder.

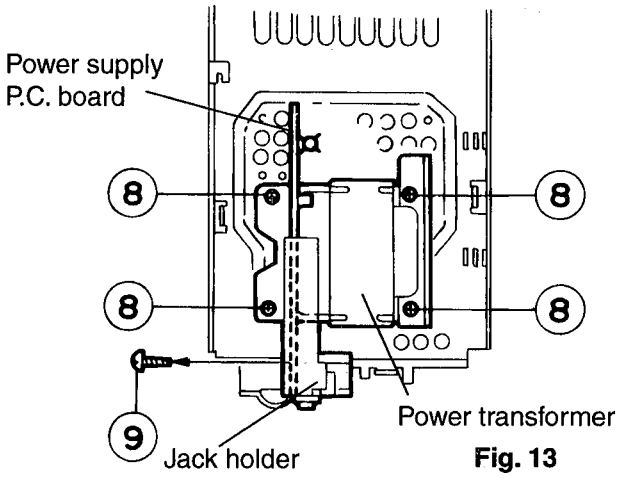

Fig. 13

■ Removing the cassette mechanism unit

(See Fig. 14)

1. Remove the rear panel.
2. Remove the left and right side panels.
3. Remove the CD player unit.
4. Remove the power amplifier P.C. board.
5. Remove the front panel assembly.
6. From inside the front panel assembly, remove the four screws ⑨ and ⑩ retaining the cassette mechanism unit.
7. From the connector CN33 on the head amplifier & mechanism control P.C. board, disconnect the card wire outgoing from the connector CN731 on the LCD system CPU P.C. board.

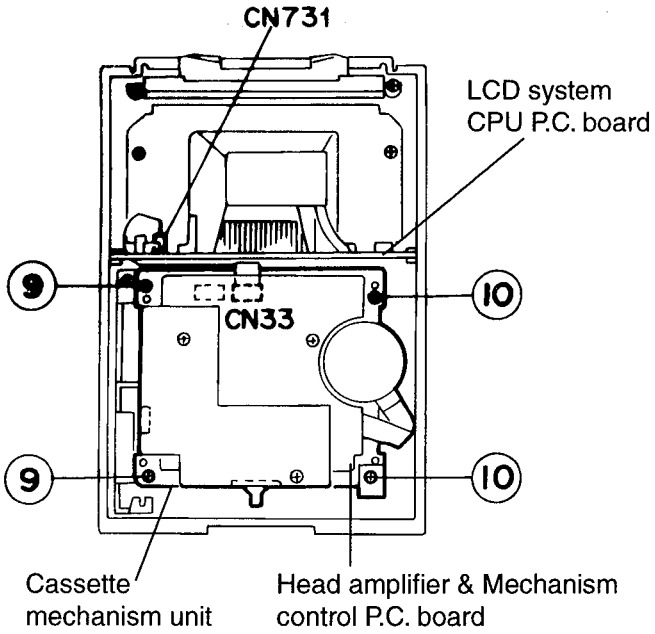

Fig. 14

■ Removing the function switch P.C. board and LCD system CPU P.C. board

(See Figs. 15 and 16)

1. Remove the rear panel.
2. Remove the left and right side panels.
3. Remove the CD player unit.
4. Remove the front panel assembly.
5. Remove the cassette mechanism unit.
6. From inside the front panel assembly remove the two screws ⑪ retaining the operation switch P.C. board.
7. From the connector CN782 on the LCD system CPU P.C. board, disconnect the connector wire outgoing from the connector CN802 on the operation switch P.C. board.
8. While sliding the two engagements ⓔ fixing the LCD system CPU P.C. board, pull out this P.C. board.
9. After disconnect the connector CN801 on the function switch P.C. board from the connector CN781 on the LCD system CPU P.C. board, remove the respective P.C. boards while pulling them upward.

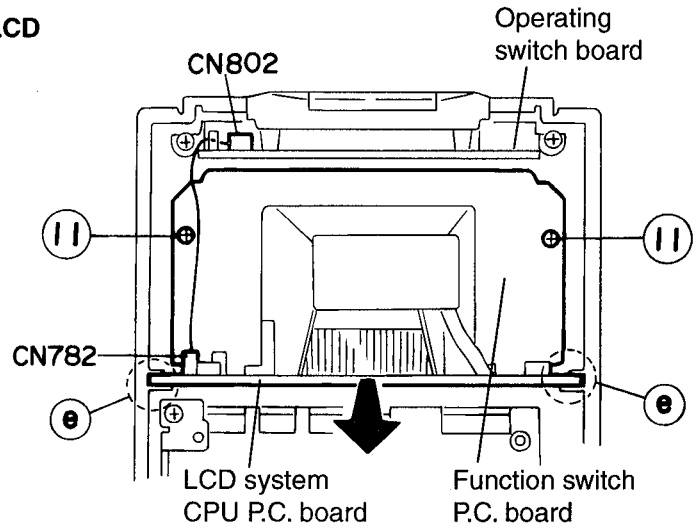

Fig. 15

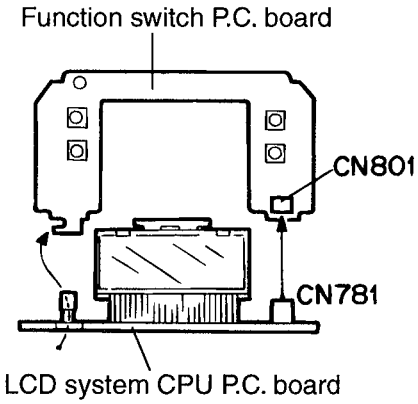

Fig. 16

<<CD Player Unit Section>>

■ Removing the CD mechanism and CD servo control P.C. board

(See Figs. 19 and 20)

1. Remove the rear panel.
2. Remove the left and right side panels.
3. Remove the CD player unit.
4. After turning back the CD player unit, remove the four screws ⑭ retaining the CD servo control P.C. board and shield.
5. From the connector CN601 on the CD servo control P.C. board, disconnect the card wire outgoing from the CD mechanism.
6. From the connector P011 on the CD mechanism P.C. board, disconnect the connector wire outgoing from the connector CN602 on the CD servo control P.C. board.
7. Remove the four screws ⑮ retaining the CD mechanism.
8. While sliding the CD mechanism in the arrow direction, take turn table out so carefully that it does not come into contact with the chassis.

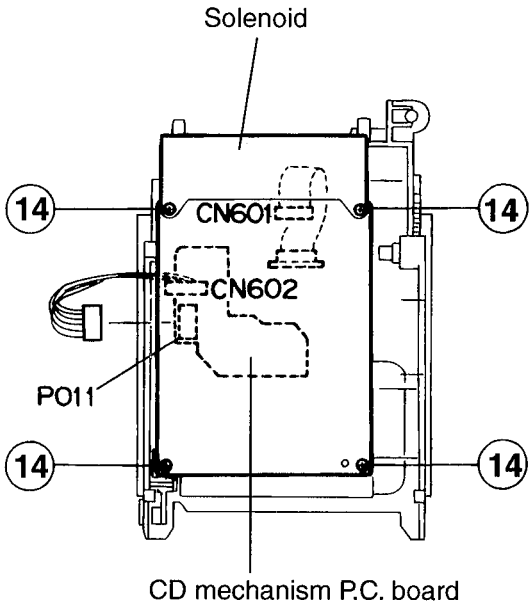

Fig.19

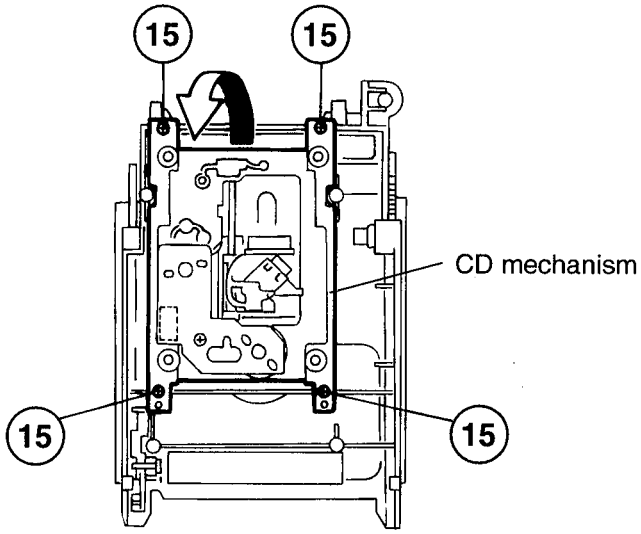

Fig.20

<<Cassette Mechanism Section>>

■ Removing the Playback/Recording & Eraser Head (See Figs. 1 and 2)

1. While shifting the trigger arms seen on the right side of the head mount in the arrow direction, turn the flywheel R in counterclockwise direction until the head mount has gone out with a click (See Fig. 1).
2. When the flywheel R is rotated in counterclockwise direction, the Playback/Recording & Eraser head will be turned in counterclockwise direction from the position in Fig. 2 to that in Fig. 3.
3. At this position, disconnect the flexible P.C. board (outgoing from the Playback/Recording & Eraser head) from the connector CN31 on the head amplifier & mechanism control P.C. board.
4. After dismounting the FPC holder, remove the flexible P.C. board.
5. Remove the flexible P.C. board from the chassis base.
6. Remove the spring Afro behind the Playback/Recording & Eraser head.
7. Loosen the reversing azimuth screw retaining the Playback /Recording & Eraser head.
8. Take out the Playback/Recording & Eraser head from the front of the head mount.
9. The Playback/Recoring & Eraser head should also be removed similarly according to Steps 1 ~ 8 above.

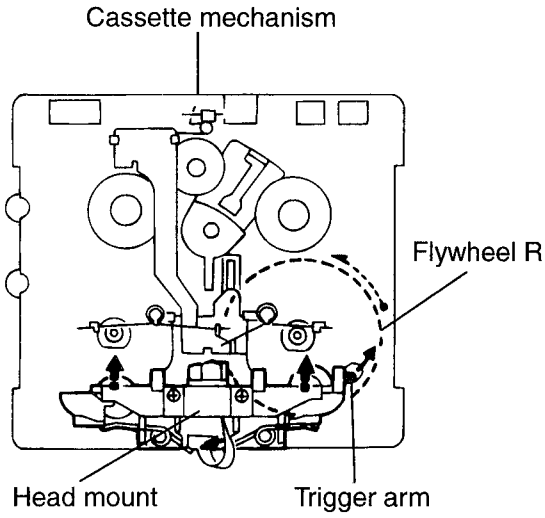

Fig. 1

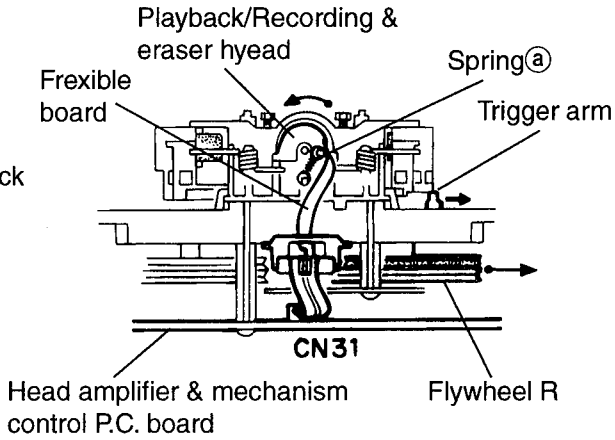

Fig. 2

■ Reassembling the Playback/Recording & Eraser Head

1. Reassemble the playback head from the front of the head mount to the position as shown in Fig. 3.
2. Fix the reversing azimuth screw.
3. Set the spring ⓐ from behind the Playback/Recording & Eraser head.
4. Attach the flexible P.C. board to the chassis base, and fix it with the FPC holder as shown in Fig. 3.
5. The Playback/Recording & Eraser head should also be reassembled similarly to Step 1 ~ 4 above.

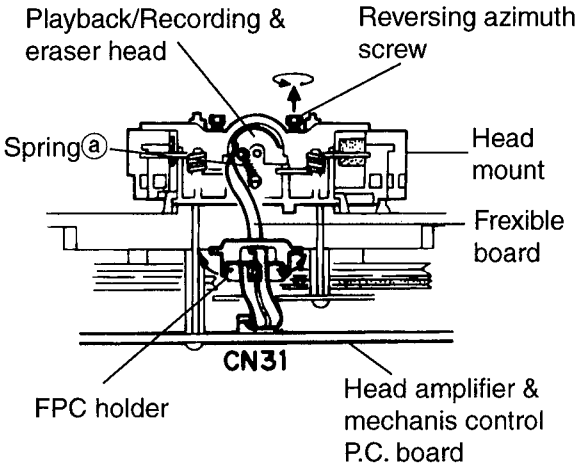

Fig. 3

■ Removing the Head amplifier & Mechanism control P.C. board

(See Fig. 4)

1. Remove the cassette mechanism assembly.
2. After turning over th cassette mechanism assembly, remove the three screws ① retaining the head amplifier & mechanism control P.C. board.
3. Disconnect the connector CN32 on the P.C. board including the connector CN 1 on the reel pulse P.C. board.
4. When necessary, remove the 4 pin parallel wire soldered to the main motor.

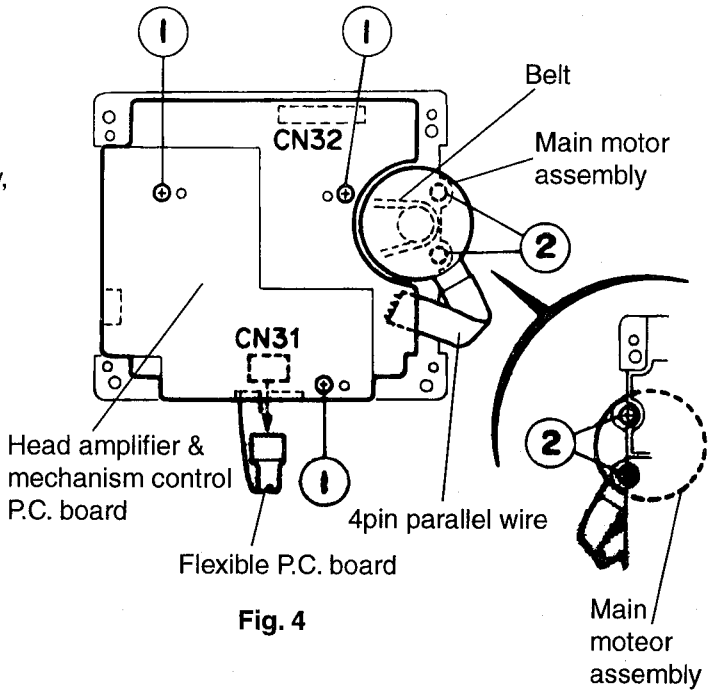

Fig. 4

■ Removing the Main Motor Assembly

(See Fig. 4~6)

1. Remove the two screws ② retaining the main motor assembly (See Fig. 4, 4a).
2. While raising the main motor, remove the capstan belt from the motor pulley (See Fig. 4a).

   Caution 1: Be sure to handle the capstan belt so carefully that this belt will not be stained by grease and other foreign matter. Moreover, this belt should be hanged while referring to the capstan belt hanging method in Fig. 5, 6.

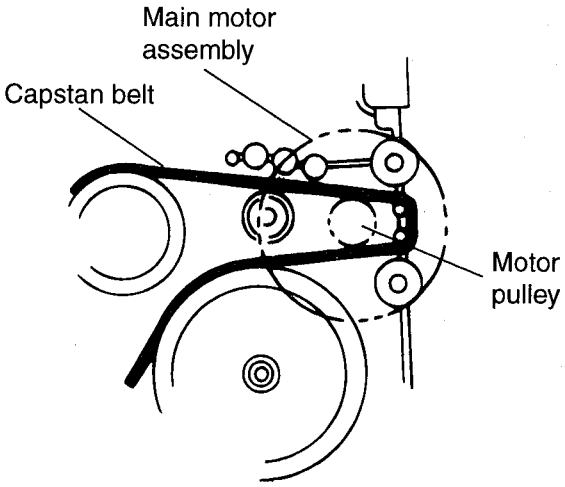

Fig. 4a

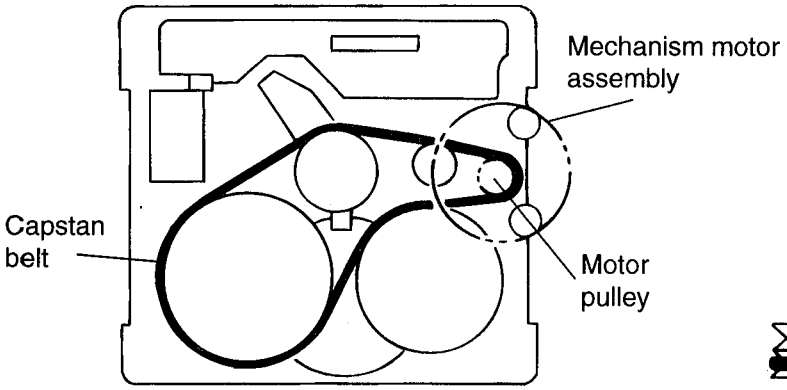

Fig. 5

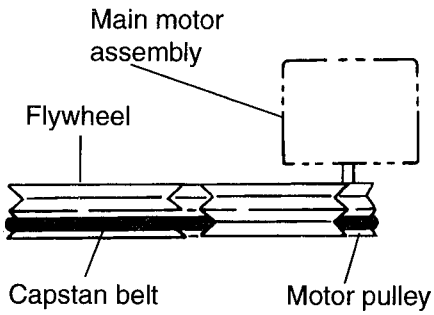

Fig. 6

■ Removing the Flywheel
(See Figs. 7 and 8)

1. Remove the head amplifier & mechanism control P.C. board.
2. Remove the main motor assembly.
3. After turning over the cassette mechanism, remove the slit washers ⓑ and ⓒ fixing the capstan shafts R and L, and pull out the flywheel R and L respectively from behind the cassette mechanism.

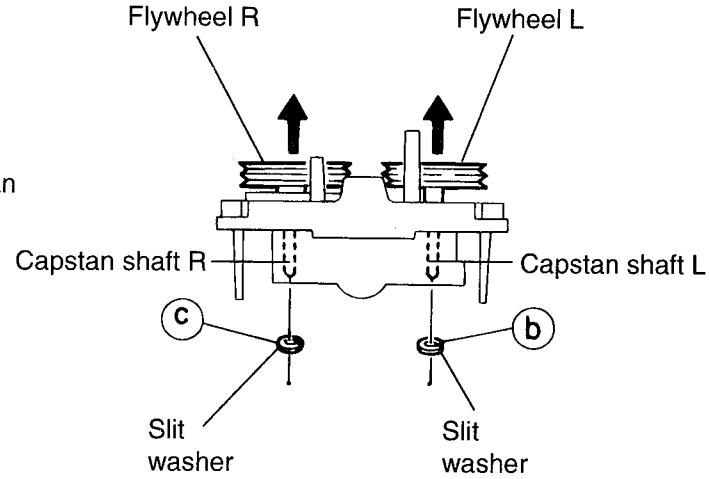

Fig.7

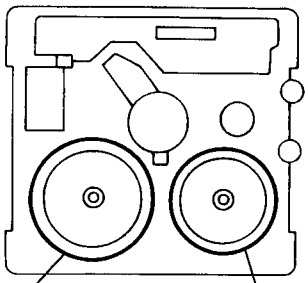

Fig. 8

■ Removing the Reel Pulse P.C. board and Solenoid
(See Fig. 9)

1. Remove the five pails ⓓ ~ⓗ reataining the reel pulse P.C. board.
2. From the surface of the reel pulse P.C. board parts, remove the two pawls ⓘ and ⓙ retaining the solenoid.

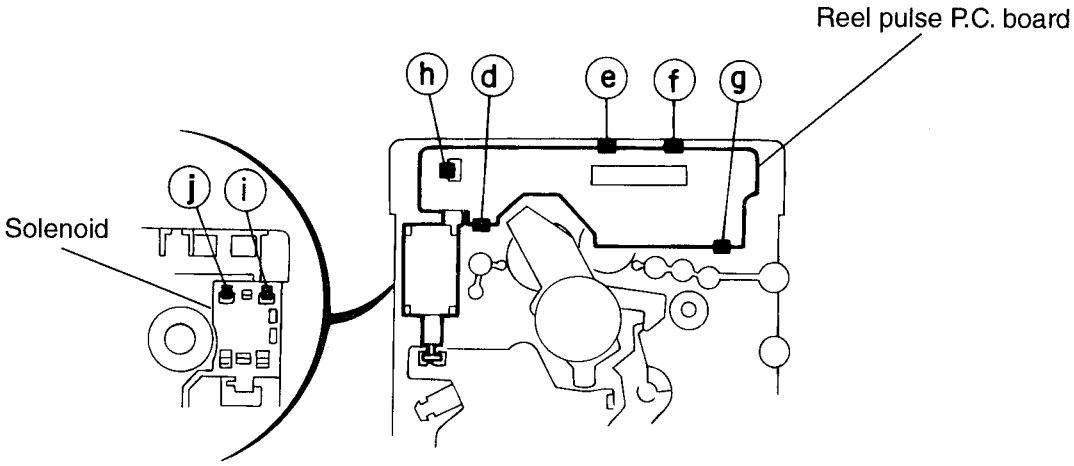

Fig. 9

Main Adjustment

■ Measurement Instruments Required for Adjustment

1. Low frequency oscillator
   This oscillator should have a capacity to output 0dBs to 600 Ω at an oscillation frequency of 50Hz-20kHz.
2. Attenuator impedance : 600 Ω
3. Electronic voltmeter
4. Distortion meter
5. Frequency counter
6. Wow & flutter meter
7. Test tape
   VTT703L : Head azimuth
   VT712 : Tape speed and running unevenness (3kHz)
   VT724 : Reference level (1kHz)
8. Blank tape
   TYPE Ⅰ : AC-225
   TYPE Ⅱ : AC-514
9. Torque gauge : For play and back tension FWD(TW2111A), REV(TW2121a) and FF/REW(TW2231A)
10. Test disc: CTS-1000

■ Measurement conditions

Power supply voltage
: AC230V (50Hz)----B/E/EE/EN
: AC110/127V/230V(50/60Hz)
: UB/UF/US/UX/U
Reference output : Speaker : 0.775V/4Ω
: Headphone : 0.077V/32Ω
Reference frequency and
input level ---------- 1kHz, AUX : -8dBs
MIX MIC: -54dBs (UB/UF/US/UX/U)
Input for confirming recording and playback characteristics ---------- AUX : -28dBs
Measurement output terminal ------- at Speaker J3002
※ Load resistance ---------- 4Ω

● Radio Input signal

AM frequency ---------- 400Hz
AM modulation ---------- 30%
FM frequency ---------- 400Hz
FM frequency deviation ---------- 22.5kHz

● Tuner section

B/E/EN version
FM Band cover: 87.5~108MHz
MW Band cover: 522~1,629kHz
LW Band cover: 144~288kHz
EE version
FM Band cover: 65~74MHz, 87.5~108MHz
MW Band cover: 522~1,629kHz
LW Band cover: 144~288kHz
UB/UF/US/UX/U version
FM Band cover: 87.5~108MHz
MW Band cover: 531~1,602kHz, 530~1,710kHz
SW Band cover: SW1 2.3~6.995MHz
: SW2 7~21.85MHz
Voltage applied to tuner ---------- +B : DC5.7V
VT : DC 12V
Reference measurement
output ---------- 26.1mV(0.28V)/3Ω
Input positions ------- AM : Standard loop antenna
FM : TP1 (hot) and TP2 (GND)

● Standard measurement position of volume

Function switch ---------- to Tape
Beat cut switch ---------- to Cut
Super Bass/Active hyper Bass ---------- to OFF
Bass Treble ---------- to Center
Adjustment of main volume to reference output
VOL : 28

Precautions for measurement

1. Apply 30pF and 33kΩ to the IF sweeper output side and 0.082μF and 100kΩ in series to the sweeper input side.
2. The IF sweeper output level should be made as low as possible within the adjustable range.
3. Since the IF sweeper is a fixed device, there is no need to adjust this sweeper.
4. Since a ceramic oscillator is used, there is no need to perform any MIX adjustment.
5. Since a fixed coil is used, there is no need to adjust the FM tracking.
6. The input and output earth systems are separated. In case of simultaneously measuring the voltage in both of the input and output systems with an electronic voltmeter for two channels, therefore, the earth should be connected particularly carefully.
7. In the case of BTL connection amp., the minus terminal of speaker is not for earthing. Therefore, be sure not to connect any other earth terminal to this terminal. This system is of an BTL system.
8. For connecting a dummy resistor when measuring the output, use the wire with a greater code size.
9. Whenever any mixed tape is used, use the band pass filter (DV-12).

<<Arrangement of Adjusting Position>>

● **Cassette mechanism section**

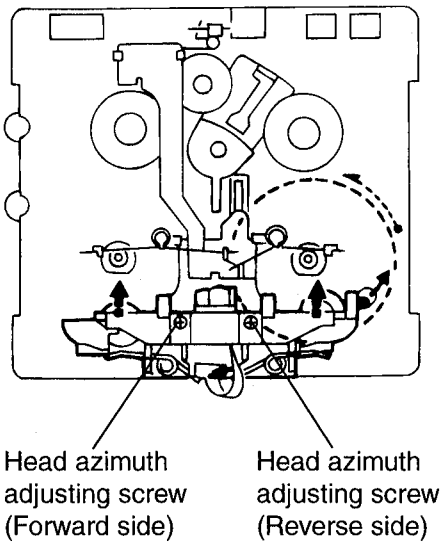

● **Cassette mechanism section (Back side)**

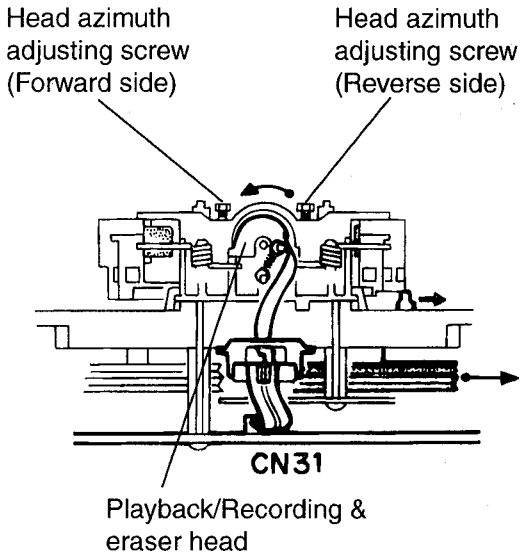

● **Front panel assembly section**

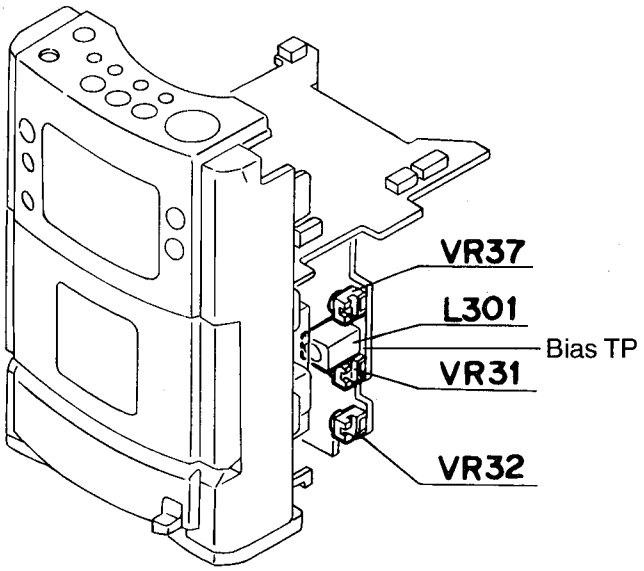

■ Tape Recorder Section

Items	Measurement conditions	Measurement method	Standard Values	Adjusting positions
Confirmation of head angle	Test tape : VTT703L (8kHz) Measurement output terminal : Speaker terminal Speaker R (Load resistance: 4Ω) : Headphone terminal	① Playback the test tape VTT703L (8kHz) ② With the recording & playback mechanism, adjust the head azimuth screw so that the forward and reverse output levels become maximum. After adjustment, lock the head azimuth at least by half turn. ③ In either case, this adjustment should be performed in both the forward and reverse directions with the head azimuth screw.	Maximum output	Adjust the head azimuth screw only when the head has been changed.
Confirmation of tape speed	Test tape : VT712 (3kHz) Measurement output terminal : Headphone terminal	Adjust VR37 so that the frequency counter reading becomes 2,940～3,090Hz± when playing back the test tape VT712 (3kHz) with playback and recording mechanism after ending forward winding of the tape.	Tape speed of deck : 2,940～3,090Hz	VR37

■ Reference Values for Confirmation Items

Items	Measurement conditions	Measurement method	Standard Values	Adjusting positions
Difference between the forward and reverse speed	Test tape : VT712 (3kHz) Measurement output terminal : Speaker terminal Speaker R (Load resistance: 4Ω) Measurement output terminal : Headphone	When the test tape VT712 (3kHz) has been played back with the recording and playback mechanism at the beginning of forward winding, the frequency counter reading of the difference between both of the mechanism should be 6.0Hz or less.	6.0Hz or less	Head azimuth screw
Wow & flutter	Test tape : VT712 (3kHz) Measurement output terminal : Headphone terminal	When the test tape VT712 (3kHz) has been played back with the recording and playback mechanism at the beginning of forward winding, the frequency counter reading of wow & flutter should be 0.25% or less (WRMS).	0.25% or less (WRMS)	

■ Electrical Performance

Items	Measurement conditions	Measurement method	Standard Values	Adjusting positions
Adjustment of recording bias current (Reference Value)	・Mode: Forward or reverse mode ・Recording mode ・Test tape : AC-514 to TYPE Ⅱ and AC-225 to TYPE Ⅰ Measurement output terminal : Both recording and headphone terminals	① With the recording and playback mechanism, load the test tapes (AC-514 to TYPE Ⅱ and AC-225 to TYPE Ⅰ), and set the mechanism to the recording and pausing condition in advance. ② After connecting 100 Ω in series to the recorder head, measure the bias current with a valve voltmeter at both of the terminals. ③ After resetting the [PAUSE] mode, start recording. At this time, adjust VR31 for Lch and VR32 for Rch so that the recording bias current values become 4.0 μA (TYPE Ⅰ) and 4.20 μA (TYPE Ⅱ).	AC-225 : 4.20 μA AC-514 : 4.0 μA	L ch : VR31 R ch : VR32
Adjustment of recording and playback frequency characteristics	Reference frequency : 1kHz and 10kHz (REF.: -20dB) Test tape : AC-514 to TYPE Ⅱ Measurement input terminal : OSC IN	① With the recording and playback mechanism, load the test tapes (AC-514 to TYPE Ⅱ), and set the mechanism to the recording and pausing condition in advance. ② While repetitively inputting the reference frequency signal of 1kHz and 10kHz from OSC IN, record and playback the rape. ③ While recording and playback the test tape in TYPE Ⅱ, adjust VR31 for Lch and VR32 for Rch so that the output deviation between 1kHz and 10kHz becomes -1dB±2dB.	Output deviation between 1kHz and 10kHz : -1dB±2dB	L ch : VR31 R ch : VR32

■ Reference Values for Electrical Function Confirmation Items

Items	Measurement conditions	Measurement method	Standard Values	Adjusting positions
Recording bias frequency	Forward or reverse ・Test tape : TYPE Ⅱ (AC-514) ・Measurement terminal : BIAS TP on P.C. board	① While changing over to and from BIAS 1 and 2, confirm that the frequency is changed. ② With the recording and playback mechanism, load the test tape. (AC-514 to TYPE Ⅱ), and set the mechanism to the recording and pausing condition in advance. ③ Confirm that the BIAS TP frequency on the P.C. board is 100kHz ± 6kHz.	100 kHz ±6 kHz	
Eraser current (Reference value)	Forward or reverse ・Recording mode ・Test tape : AC-514 to TYPE Ⅱ and AC-225 to TYPE Ⅰ Measurement terminal : Both of the eraser head terminals	① While recording and playback mechanism, load the test tapes (AC-514 to TYPE Ⅱ and AC-225 to TYPE Ⅰ), and set the mechanism to the recording and pausing conditions in advance. ② After setting to the recording conditions, connect 1W in series to the eraser head on the recording and playback mechanism side, and measure the eraser current from both of the eraser terminals.	TYPE Ⅱ : 120 mA TYPE Ⅰ : 75 mA	

Description of Main ICs

■ UPD78064GF-108 (IC701) : SYSTEM CONTROL CPU

1. Pin Layout

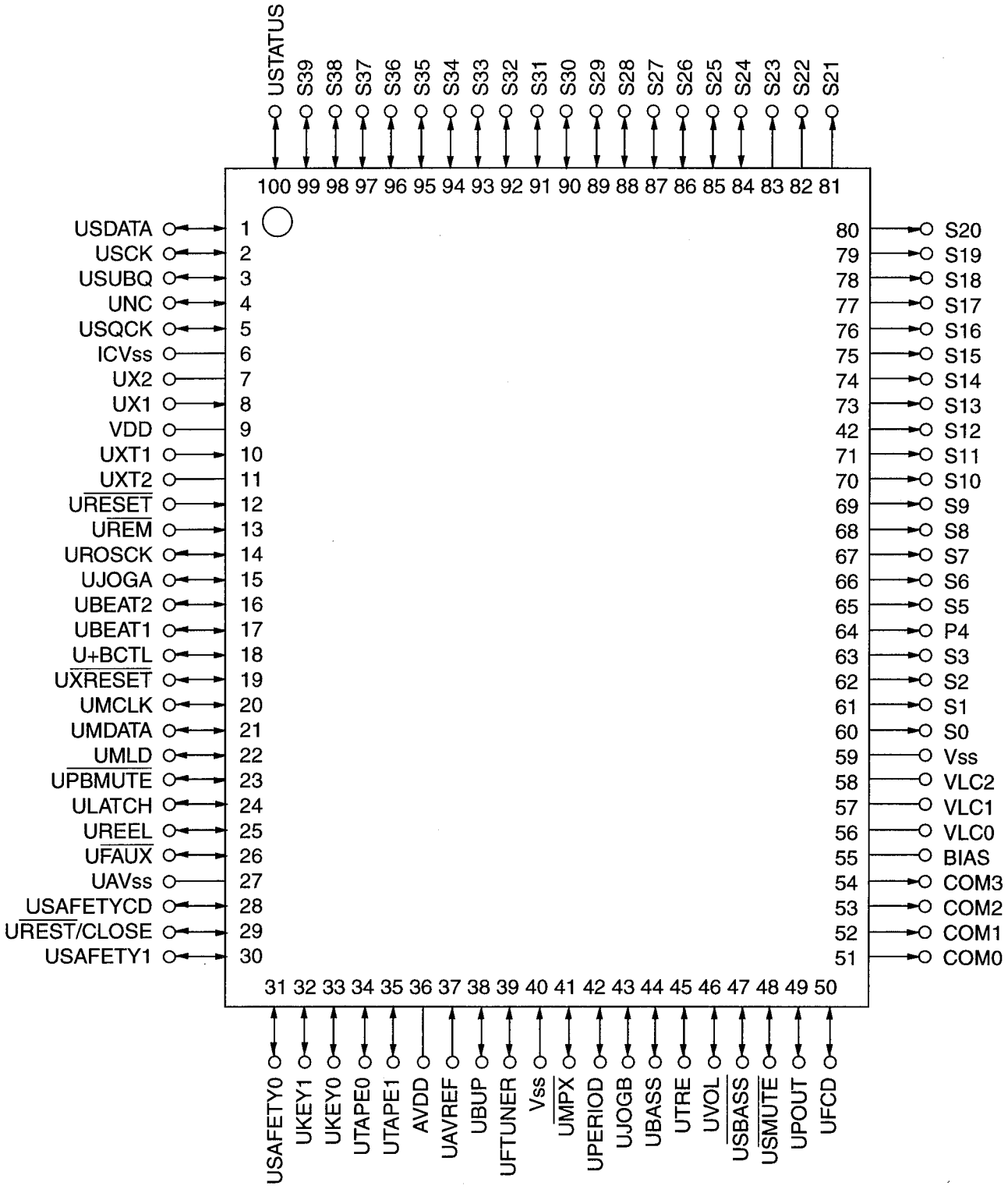

2. Block diagram

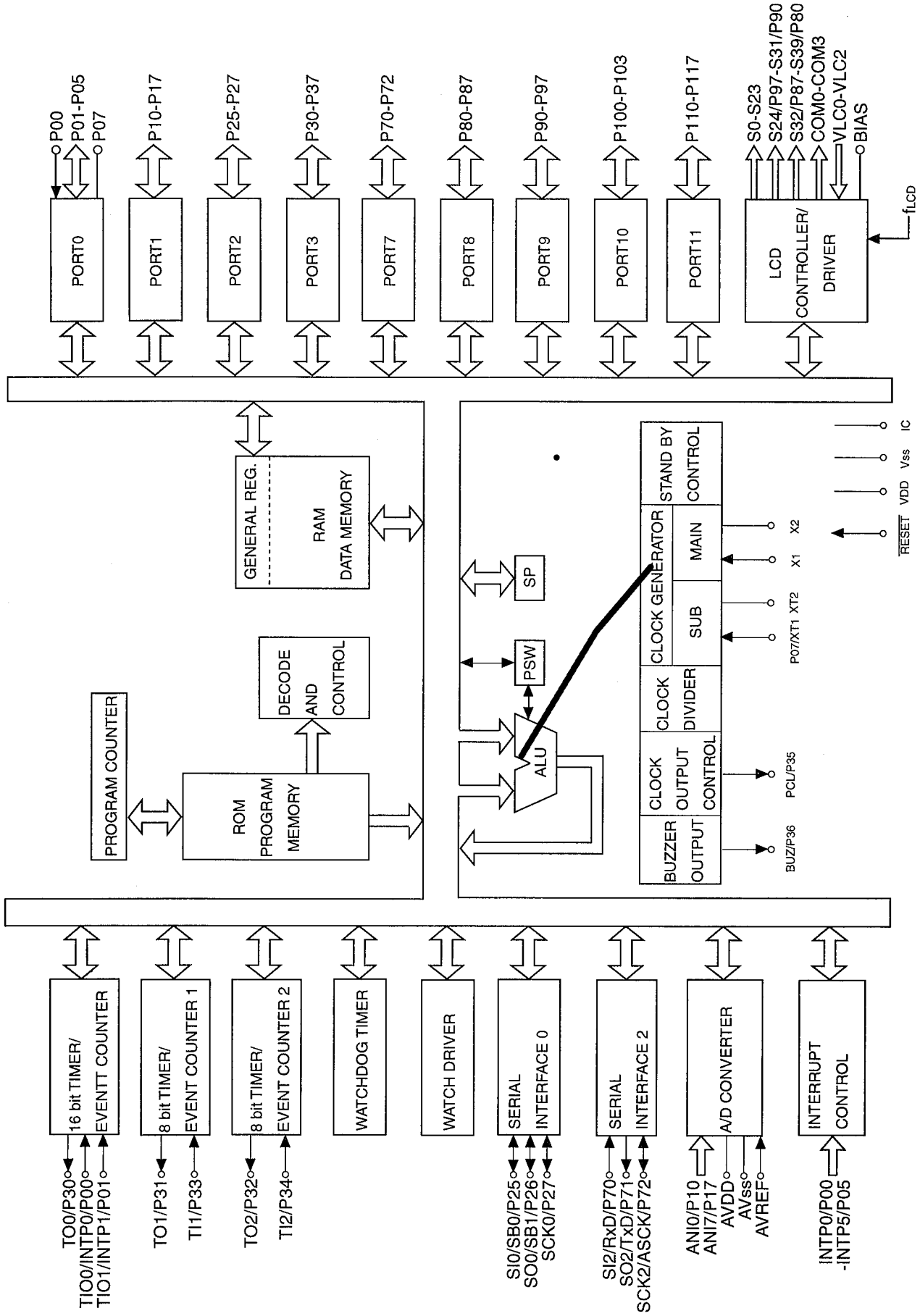

3. Description

pin no	Symbol	I/O	Function
1	USDATA	I/O	Serial data of Tuner PLL / Tape IC
2	USCK	O	Serial clock of Tuner PLL / Tape IC
3	USUBQ	I	CD Q code data
4	UNC	--	No use
5	USQCK	O	CD Q code clock data
6	ICVss	--	GND
7	UX2	--	Main system clock
8	UX1	I	Main system clock
9	VDD	--	Power supply
10	UXT1	I	Sub system clock
11	UXT2	--	Sub system clock
12	URESET	I	Reset
13	$\overline{\text{UREM}}$	I	Remote control
14	URDSCK	O	Serial clock of RDS
15	UJOGA	I	JOG encorder A
16	UBEAT2	O	Main clock select 2
17	UBEAT1	O	Main clock select 1
18	U+BCTL	O	SV control by switch
19	$\overline{\text{UXRESET}}$	O	CD LSI reset
20	UMCLK	O	CD LSI command clock
21	UMDATA	O	CD LSI command data
22	UMLD	O	CD LSI command dummy
23	$\overline{\text{UPBMUTE}}$	O	Mute of Tape playback
24	ULATCH	O	Tape IC strobo
25	UREEL	I	Tape end dedect.
26	UFAUX	O	Fucntion AUX
27	UAVss	--	AD converter GND
28	USAFETYCD	I	CD trable voltage detect.
29	$\overline{\text{URESET}}$/CLOSE	I	[RESET/CLOSE] Switch
30	USAFETY1	I	Trable voltage detect.
31	USAFETY0	I	Trable voltage detect.
32	UKEY1	I	Main key input 1
33	UKEY0	I	Main key input 0
34	UTAPE0	I	Tape switch 2
35	UTAPE1	I	Tape switch 1
36	AVDD	--	AD converter power supply of same voltage as VDD
37	UAVREF	--	AD converter standard voltage
38	UBUP	I	Judgement of back-up power supply
39	UFTUNER	O	Function Tuner
40	Vss	--	GND
41	$\overline{\text{UMPX}}$	I	FM MPX detect.
42	UPERIOD	O	Tuner PLL strobo
43	UJOGB	I	JOG B encorder
44	UBASS	O	BASS control
45	UTRE	O	Tre. control
46	UVOL	O	Vol. control
47	$\overline{\text{USBASS}}$	O	BASS control
48	$\overline{\text{USMUTE}}$	O	System mute
49	UPOUT	O	Power ON / OFF
50	$\overline{\text{UFCD}}$	O	Function CD

pin no	Symbol	I/O	Function
51	COM0	O	LCD common 0
52	COM1	O	LCD common 1
53	COM2	O	LCD common 2
54	COM3	O	LCD common 3
55	BIAS	--	LCD Bias
56	VLC0	--	LCD Bias Bias > VLC0 > VLC1 > VLC2
57	VLC1	--	LCD Bias
58	VLC2	--	LCD Bias
59	Vss	--	GND
60	S0	O	To LCD segment 0
61	S1	O	To LCD segment 1
62	S2	O	To LCD segment 2
63	S3	O	To LCD segment 3
64	S4	O	To LCD segment 4
65	S5	O	To LCD segment 5
66	S6	O	To LCD segment 6
67	S7	O	To LCD segment 7
68	S8	O	To LCD segment 8
69	S9	O	To LCD segment 9
70	S10	O	To LCD segment 10
71	S11	O	To LCD segment 11
72	S12	O	To LCD segment 12
73	S13	O	To LCD segment 13
74	S14	O	To LCD segment 14
75	S15	O	To LCD segment 15
76	S16	O	To LCD segment 16
77	S17	O	To LCD segment 17
78	S18	O	To LCD segment 18
79	S19	O	To LCD segment 19
80	S20	O	To LCD segment 20
81	S21	O	To LCD segment 21
82	S22	O	To LCD segment 22
83	S23	O	To LCD segment 23
84	S24	O	To LCD segment 24
85	S25	O	To LCD segment 25
86	S26	O	To LCD segment 26
87	S27	O	To LCD segment 27
88	S28	O	To LCD segment 28
89	S29	O	To LCD segment 29
90	S30	O	To LCD segment 30
91	S31	O	To LCD segment 31
92	S32	O	To LCD segment 32
93	S33	O	To LCD segment 33
94	S34	O	To LCD segment 34
95	S35	O	To LCD segment 35
96	S36	O	To LCD segment 36
97	S37	O	To LCD segment 37
98	S38	O	To LCD segment 38
99	S39	O	To LCD segment 39
100	USTATUS	I	CD LSI status

■ MN35510(IC603):DIGITAL SERVO&DIGITAL SIGNAL PROCESSER

1. Terminal Layout

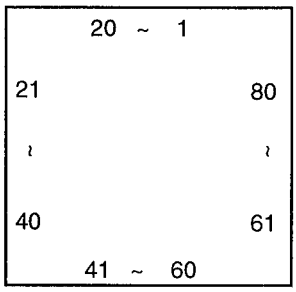

2.Block Diagram

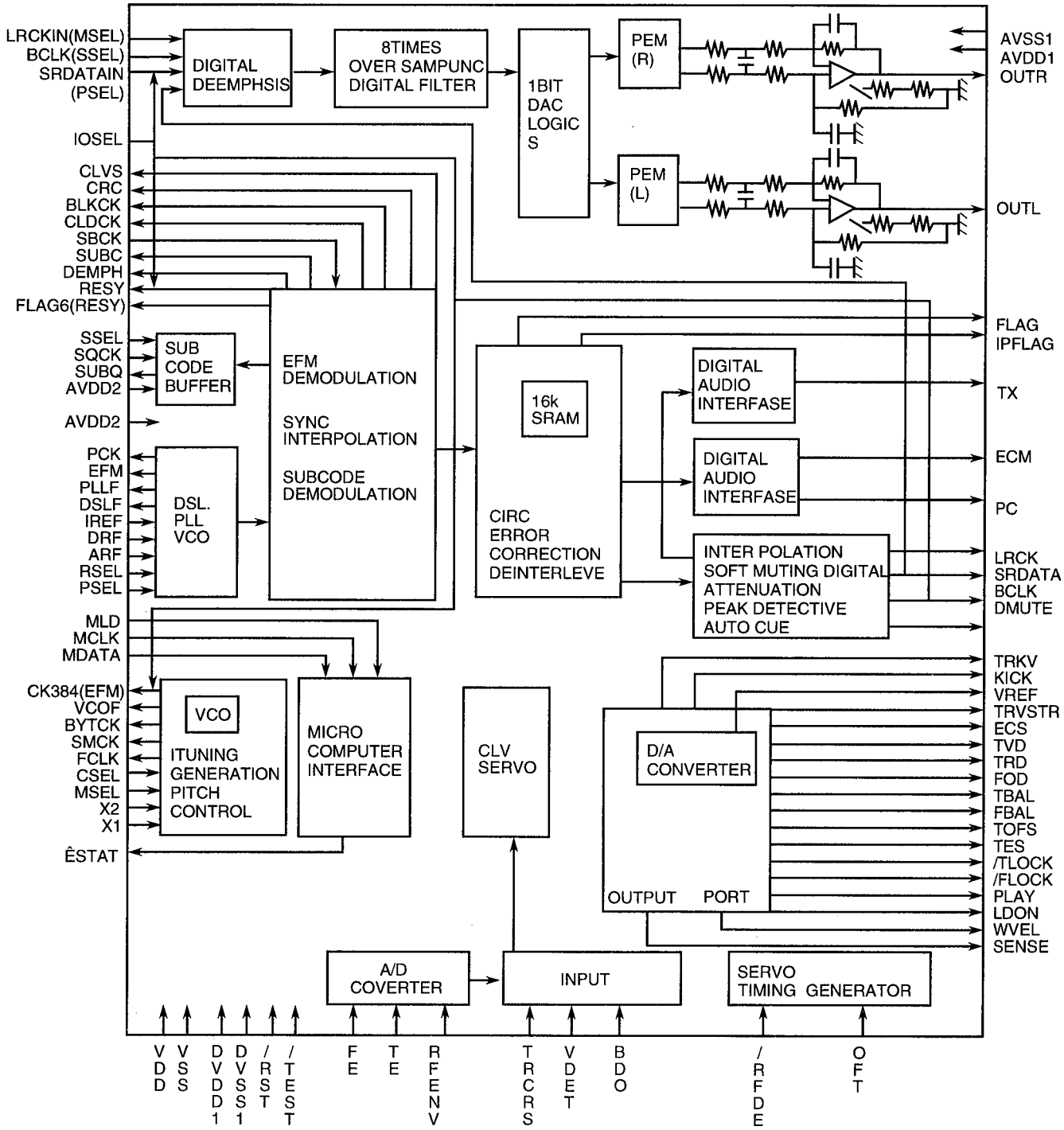

3. Description

Pin No.	symbol	I/O	Description	Pin No.	symbol	I/O	Description
1	BCLK	O	Not used	41	TES	O	Tracking error shunt signal output(H:shunt)
2	LRCK	O	Not used	42	PLAY	—	Not used
3	SRDATA	O	Not used	43	WVEL	—	Not used
4	DVDD1	—	Power supply (Digital)	44	ARF	I	RF signal input
5	DVSS1	—	Connected to GND	45	IREF	I	Reference current input pin
6	TX	O	Digital audio interface output	46	DRF	I	Bias pin for DSL
7	MCLK	I	μ com command clock signal input (Data is latched at signal's rising point)	47	DSLF	I/O	Loop filter pin for DSL
8	MDATA	I	μ com command data input	48	PLLF	I/O	Loop filter pin for PLL
9	MLD	I	μ com command load signal input	49	VCOF	—	Not used
10	SENSE	O	Sence signal output	50	AVDD2	—	Power supply(Analog)
11	FLOCK	O	Focus lock signal output Active :Low	51	AVSS2	—	Connected to GND(Analog)
12	TLOCK	O	Tracking lock signal output Active :Low	52	EFM	—	Not used
13	BLKCK	O	sub-code·block·clock signal output	53	PCK	—	Not used
14	SQCK	I	Outside clock for sub-code Q resister input	54	PDO	—	Not used
15	SUBQ	O	Sub-code Q -code output	55	SUBC	—	Not used
16	DMUTE	—	Connected to GND	56	SBCK	—	Not used
17	STATUS	O	Status signal (CRC,CUE,CLVS,TTSTOP,ECLV,SQOK)	57	VSS	—	Connected to GND(for X'tal cscillation circuit)
18	RST	I	Reset signal input (L:Reset)	58	XI	I	Input of 16.9344MHz X'tal oscillation circuit
19	SMCK	—	Not used	59	X2	O	Output of X'tal oscillation circuit
20	PMCK	—	Not used	60	VDD	—	Power supply(for X'tal cscillationcircuit)
21	TRV	O	Traverse enforced output	61	BYTCK	—	Not used
22	TVD	O	Traverse drive output	62	CLDCK	—	Not used
23	PC	—	Not used	63	FLAG	—	Not used
24	ECM	O	Spindle motor drive signal (Enforced mode output) 3-State	64	IPPLAG	—	Not used
25	ECS	O	Spindle motor drive signal (Servo error signal output)	65	FLAG	—	Not used
26	KICK	O	Kick pulse output	66	CLVS	—	Not used
27	TRD	O	Tracking drive output	67	CRC	—	Not used
28	FOD	O	Focus drive output	68	DEMPH		Not used
29	VREF	I	Reference voltage input pin for D/A output block (TVD,FOD,FBA,TBAL)	69	RESY	—	Not used
30	FBAL	O	Focus Balance adjust signal output	70	IOSEL	—	pull up
31	TBAL	O	Tracking Balance adjust signal output	71	TEST	—	pull up
32	FE	I	Focus error signal input(Analog input)	72	AVDD1	—	Power supply(Digital)
33	TE	I	Tracking error signal input(Analog input)	73	OUT L	O	Lch audio output
34	RF ENV	I	RF envelope signal input(Analog input)	74	AVSS1	—	Connected to GND
35	VDET	I	Vibration detect signal input(H:detect)	75	OUT R	O	Rch audio output
36	OFT	I	Off track signal input(H:off track)	76	RSEL	—	pull up
37	TRCRS	I	Track cross signal input	77	CSEL	—	Connected to GND
38	RFDET	I	RF detect signal input(L:detect)	78	PSEL	—	Connected to GND
39	BDO	I	BDO input pin(L:detect)	79	MSEL	—	Connected to GND
40	LDON	O	Laser ON signal output(H:on)	80	SSEL	—	Pull up

■ LC72136N(IC2):PLL Frequency sinsesizer L S I

1. Layout

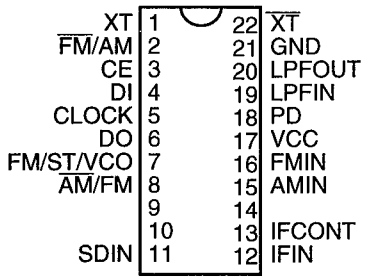

2. Block

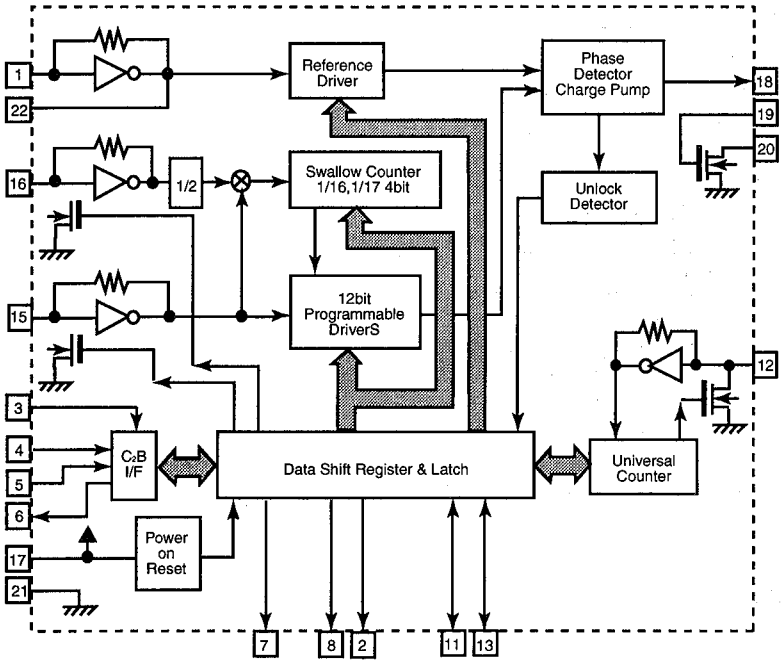

3. Function

Pin No.	Symbol	I/O	Function	Pin No.	Symbol	I/O	Function
1	XT	I	X'tal oscillator connect (75KHz)	12	IFIN	I	IF counter signal input
2	$\overline{FM}$/AM	O	LOW:FM mode	13	IFCONT	O	IF signal output
3	CE	I	When data output/input for 4pin(input) and 6pin(output): H	14		-	Not use
4	DI	I	Input for receive the sirisl data from controller	15	AMIN	I	AM Local OSC signal output
5	CLOCK	I	Sync signal input use	16	FMIN	I	FM Local OSC signal input
6	DO	O	Data output for Controller Output port	17	VCC	-	Power suplly(VDD=4.5~5.5V) When power ON:Reset circuit move
7	FM/ST/VCO	O	"Low": MW mode	18	PD	O	PLL charge pump output(H: Local OSC frequency Height than Reference frequency. L: Low Agreement: Height impedance)
8	$\overline{AM}$/FM	O	Not use	19	LPFIN	I	Input for active lowpassfilter of PLL
9		-	Not use	20	LPFOUT	O	Output for active lowpassfilter of PLL
10		-	Input/output port	21	GND	-	Connected to GND
11	SDIN	I/O	Data input/output	22	$\overline{XT}$	I	X'tal oscillator(75KHz)

■ BA6897FP(IC0602) 4channel driver

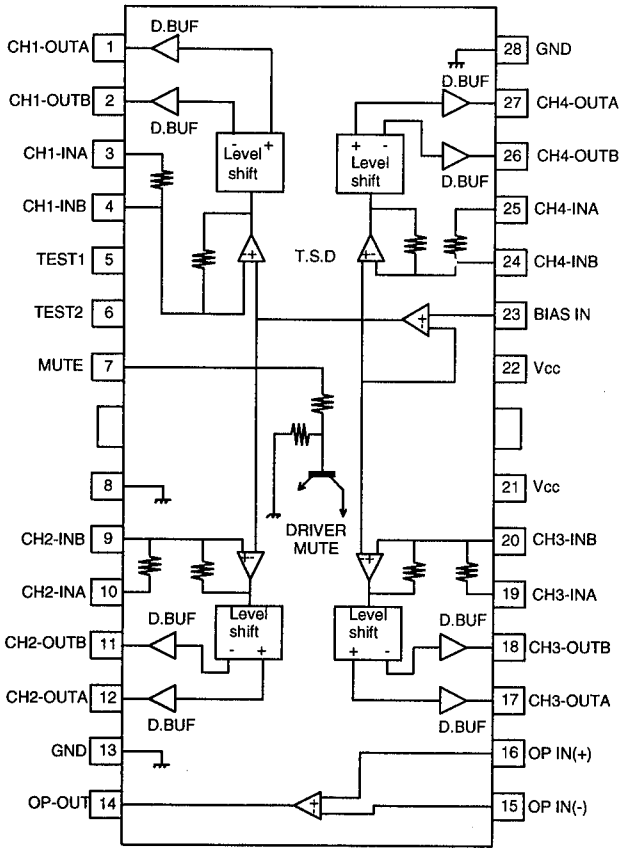

■ IC38: BH3852S (Electrical Volume)

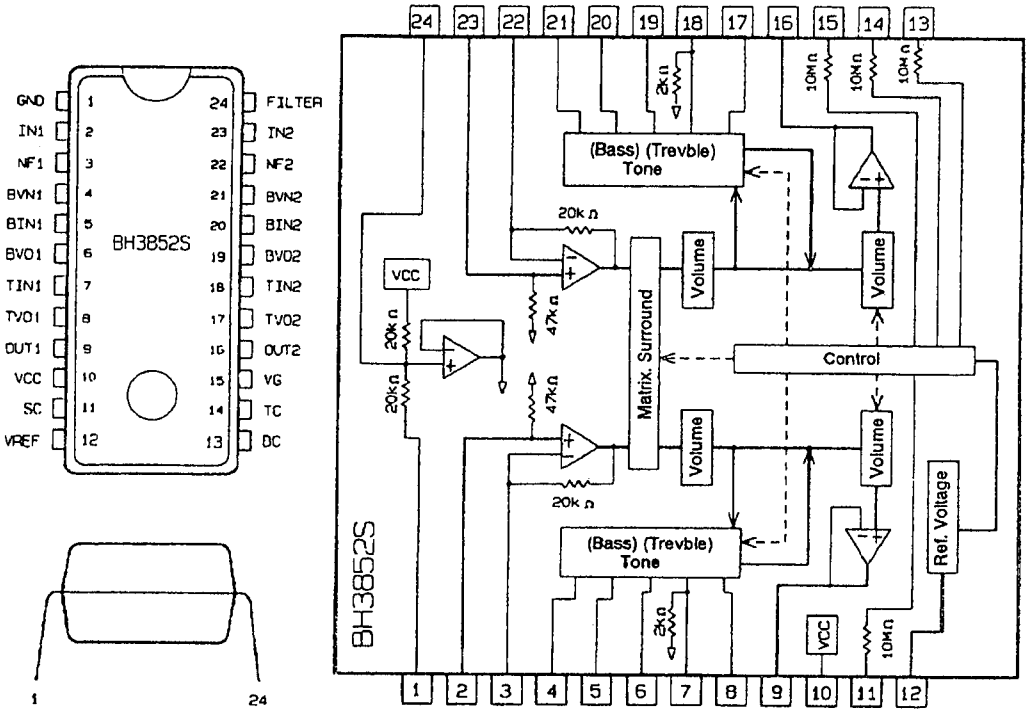

Wiring Connections

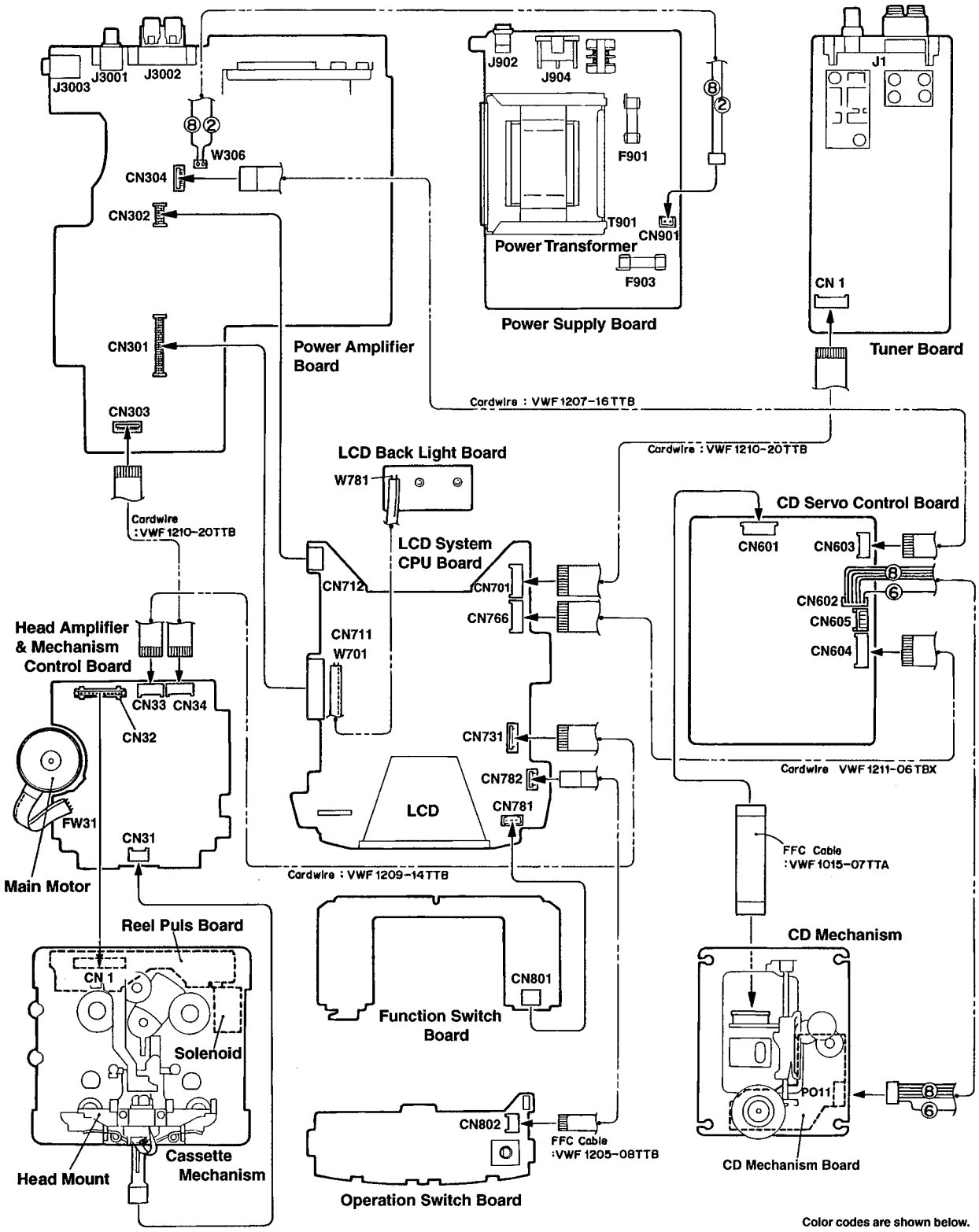

Color codes are shown below.

1 ---------- Brown
2 ---------- Red
3 ---------- Orange
4 ---------- Yellow
5 ---------- Green
6 ---------- Blue
7 ---------- Violet
8 ---------- Gray
9 ---------- White
0 ---------- Black
D ---------- Pink
C ---------- Light Blue

Block Diagram

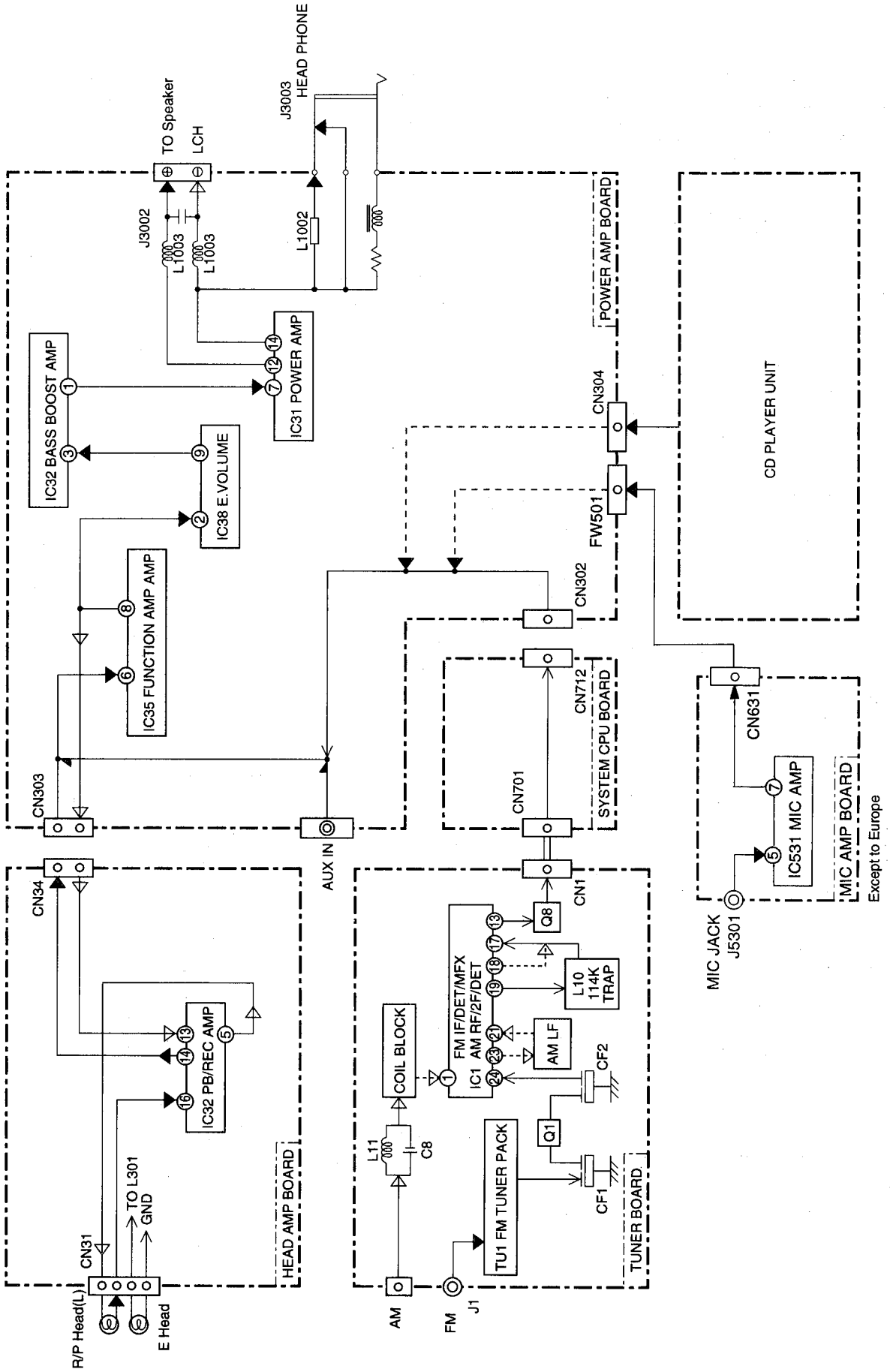

Standard Schematic Diagrams

■ Head Amplifier & Mechanism Control Circuit

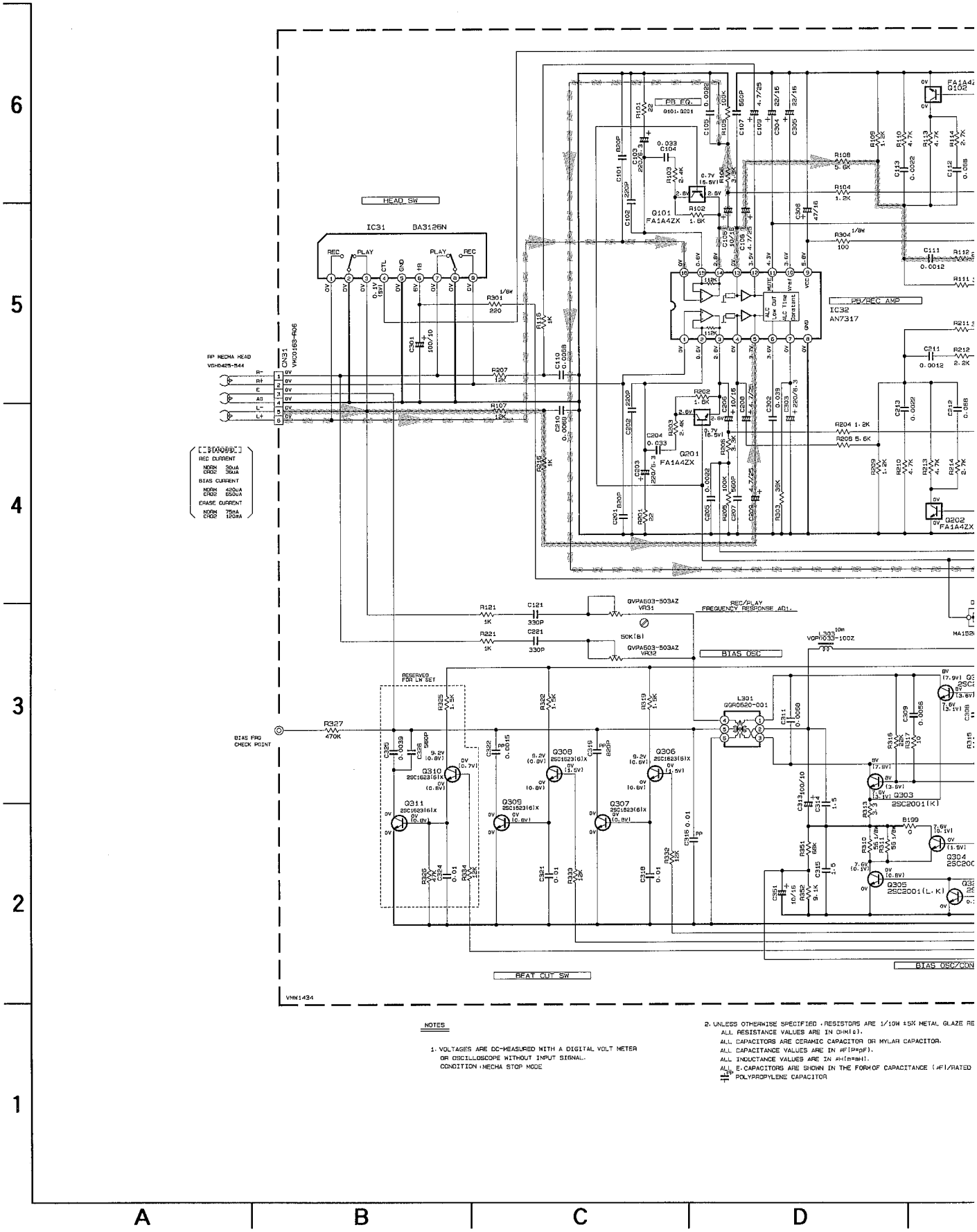

NOTES

1. VOLTAGES ARE DC-MEASURED WITH A DIGITAL VOLT METER OR OSCILLOSCOPE WITHOUT INPUT SIGNAL.
   CONDITION : MECHA STOP MODE

2. UNLESS OTHERWISE SPECIFIED , RESISTORS ARE 1/10W ±5% METAL GLAZE RE
   ALL RESISTANCE VALUES ARE IN OHM(s).
   ALL CAPACITORS ARE CERAMIC CAPACITOR OR MYLAR CAPACITOR.
   ALL CAPACITANCE VALUES ARE IN μF(=pF).
   ALL INDUCTANCE VALUES ARE IN μH(=mH).
   ALL E-CAPACITORS ARE SHOWN IN THE FORM OF CAPACITANCE (μF)/RATED
   PP POLYPROPYLENE CAPACITOR

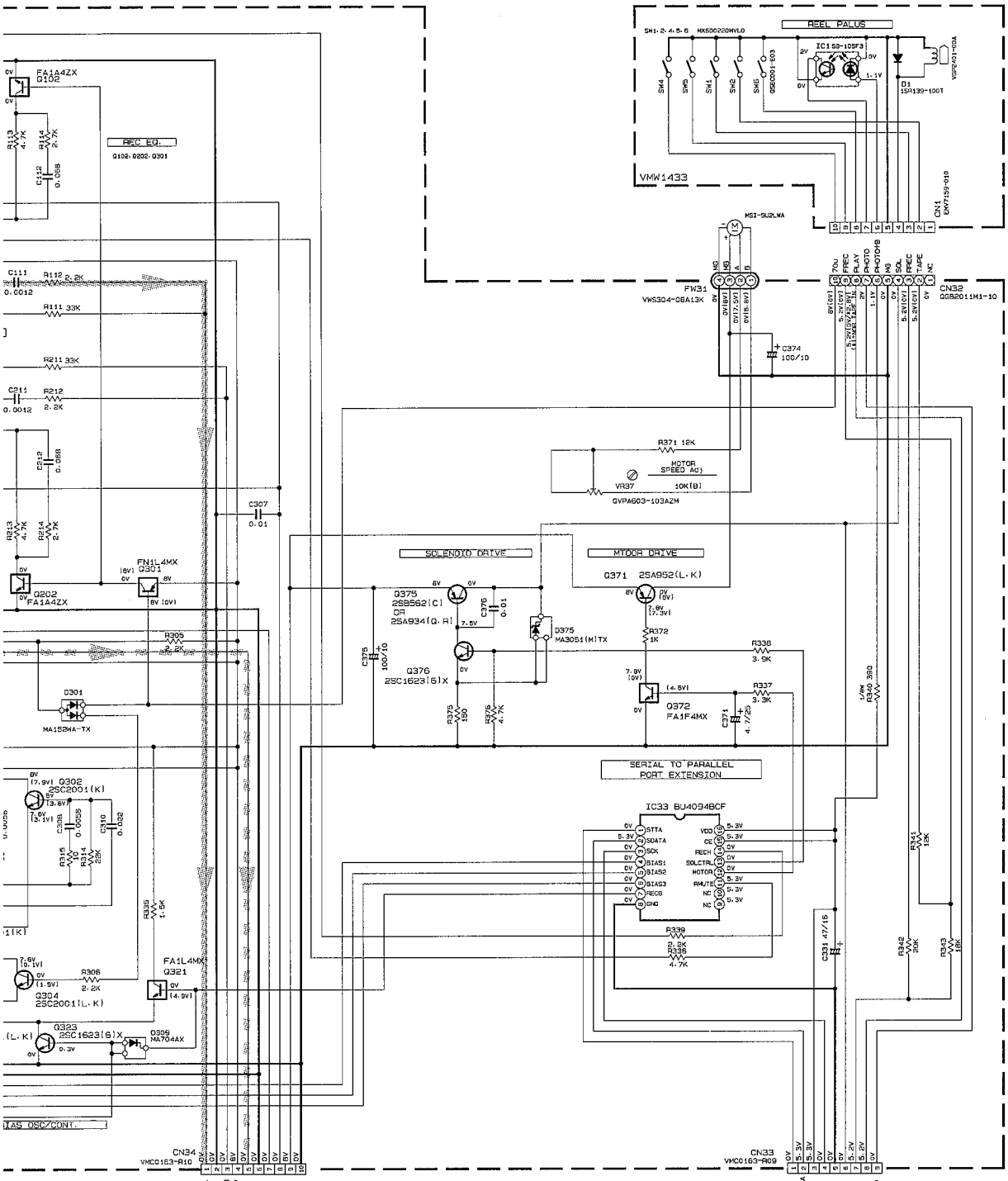

PARTS	NAME	REF. NO
22K	FA1A4ZX	Q101, Q201 Q102, Q202
47K 47K	FN1L4MX	Q301
47K 47K	FA1L4MX	Q321
22K 22K	FA1F4MX	Q371

Rec / Main signal

P.B. / Main signal

E | F | G | H | I

■LCD & System CPU Circuit (UX-T150/UX-T151 B/E/EE/EN)

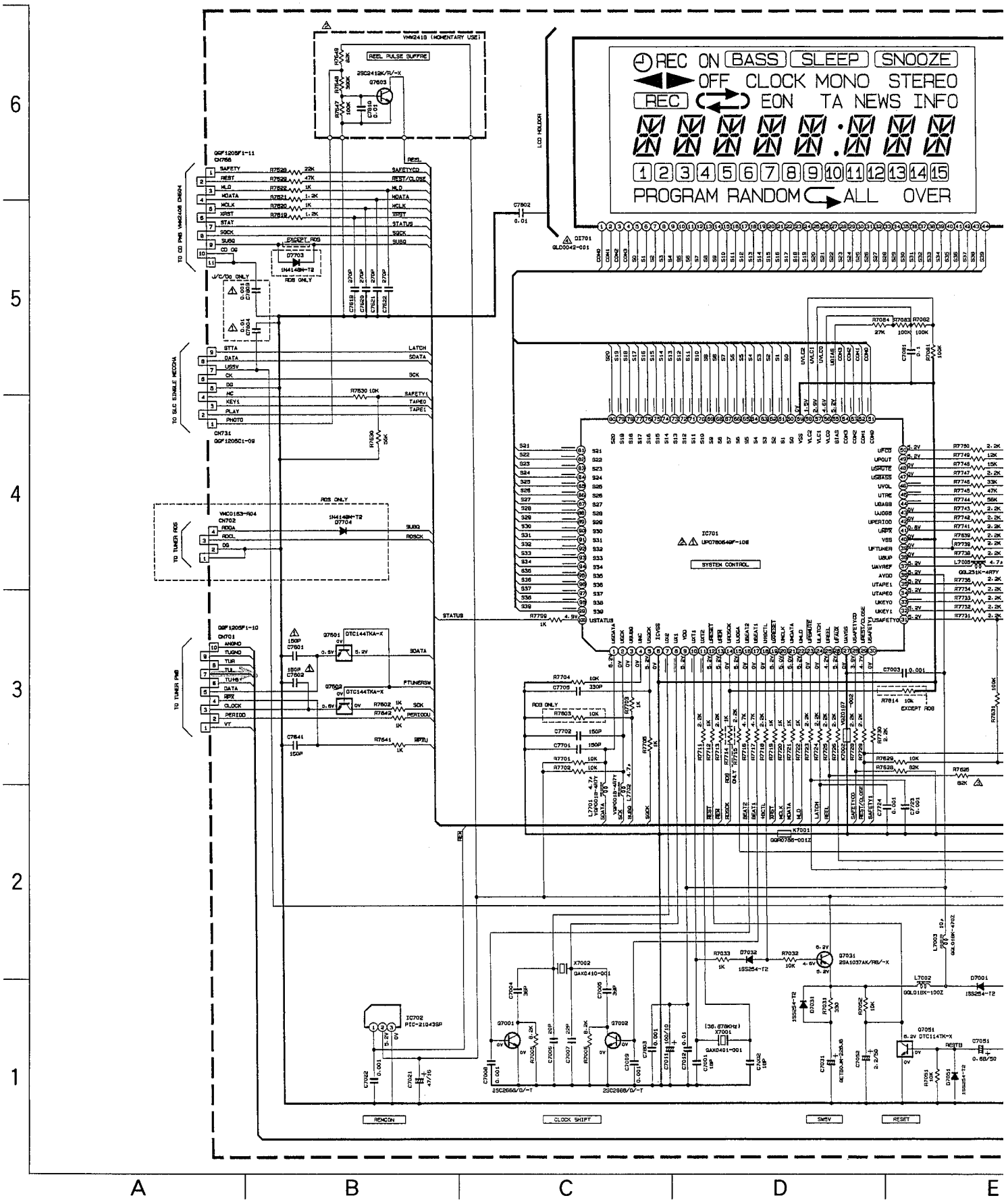

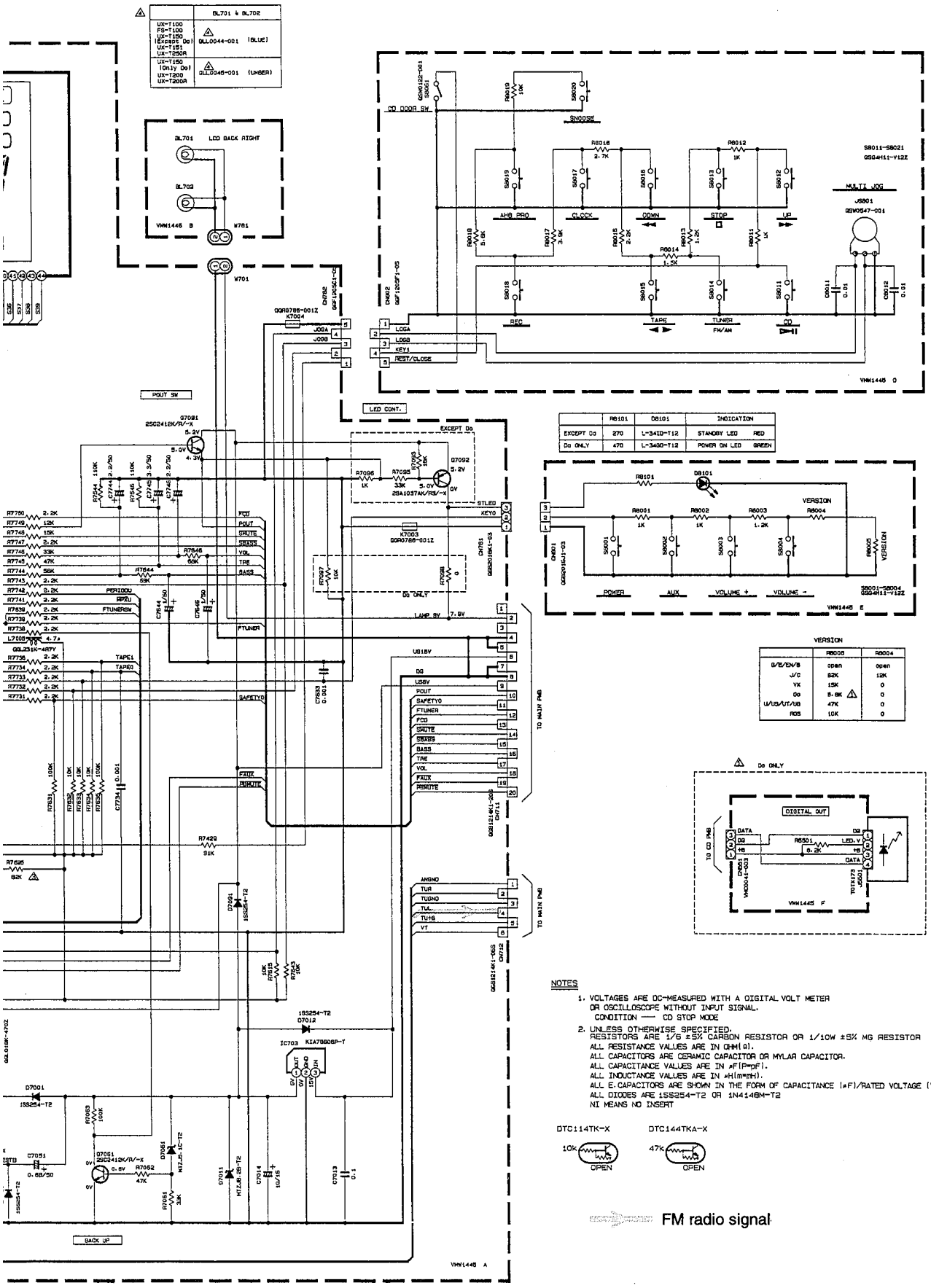

	R8101	D8101	INDICATION	
EXCEPT Do	270	L-341D-T12	STANDBY LED	RED
Do ONLY	470	L-3400-T12	POWER ON LED	GREEN

VERSION

	R8005	R8004
G/E/EN/S	open	open
J/C	82K	12K
VK	15K	0
Do	8.6K	0
U/US/UT/UB	47K	0
R05	10K	0

■ LCD & System CPU Circuit (UX-T150 UB/UF/US/UX/U)

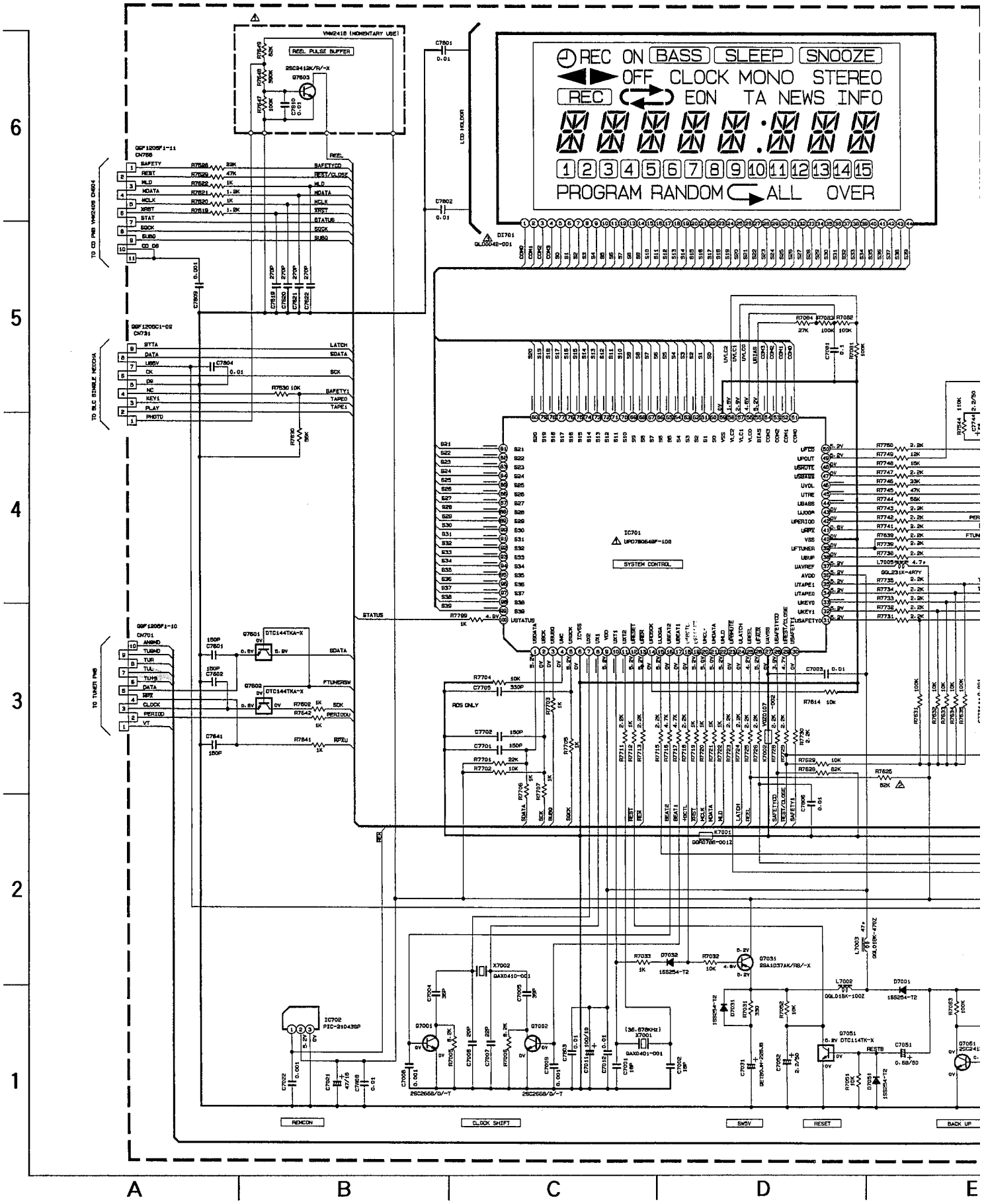

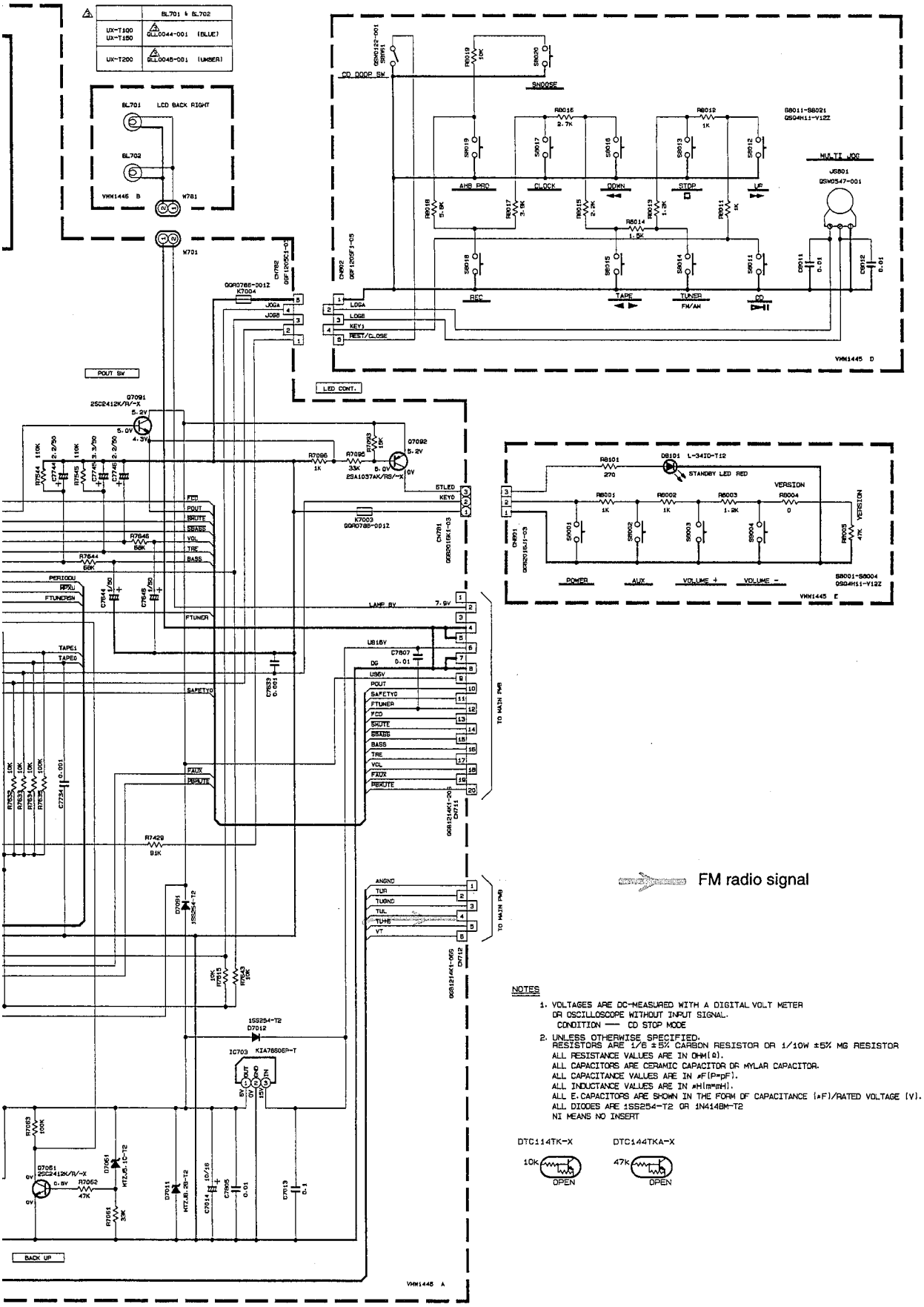

NOTES

1. VOLTAGES ARE DC-MEASURED WITH A DIGITAL VOLT METER OR OSCILLOSCOPE WITHOUT INPUT SIGNAL.
   CONDITION —— CD STOP MODE
2. UNLESS OTHERWISE SPECIFIED.
   RESISTORS ARE 1/6 ±5% CARBON RESISTOR OR 1/10W ±5% MG RESISTOR
   ALL RESISTANCE VALUES ARE IN OHM(Ω).
   ALL CAPACITORS ARE CERAMIC CAPACITOR OR MYLAR CAPACITOR.
   ALL CAPACITANCE VALUES ARE IN μF(P=pF).
   ALL INDUCTANCE VALUES ARE IN μH(m=mH).
   ALL E.CAPACITORS ARE SHOWN IN THE FORM OF CAPACITANCE (μF)/RATED VOLTAGE (V).
   ALL DIODES ARE 1SS254-T2 OR 1N4148M-T2
   NI MEANS NO INSERT

DTC114TK-X — 10k — OPEN

DTC144TKA-X — 47k — OPEN

E | F | G | H | I

■Function Amplifier & Power Amplifier Circuit (UX-T150/UX-T151 B/E/EE/EN)

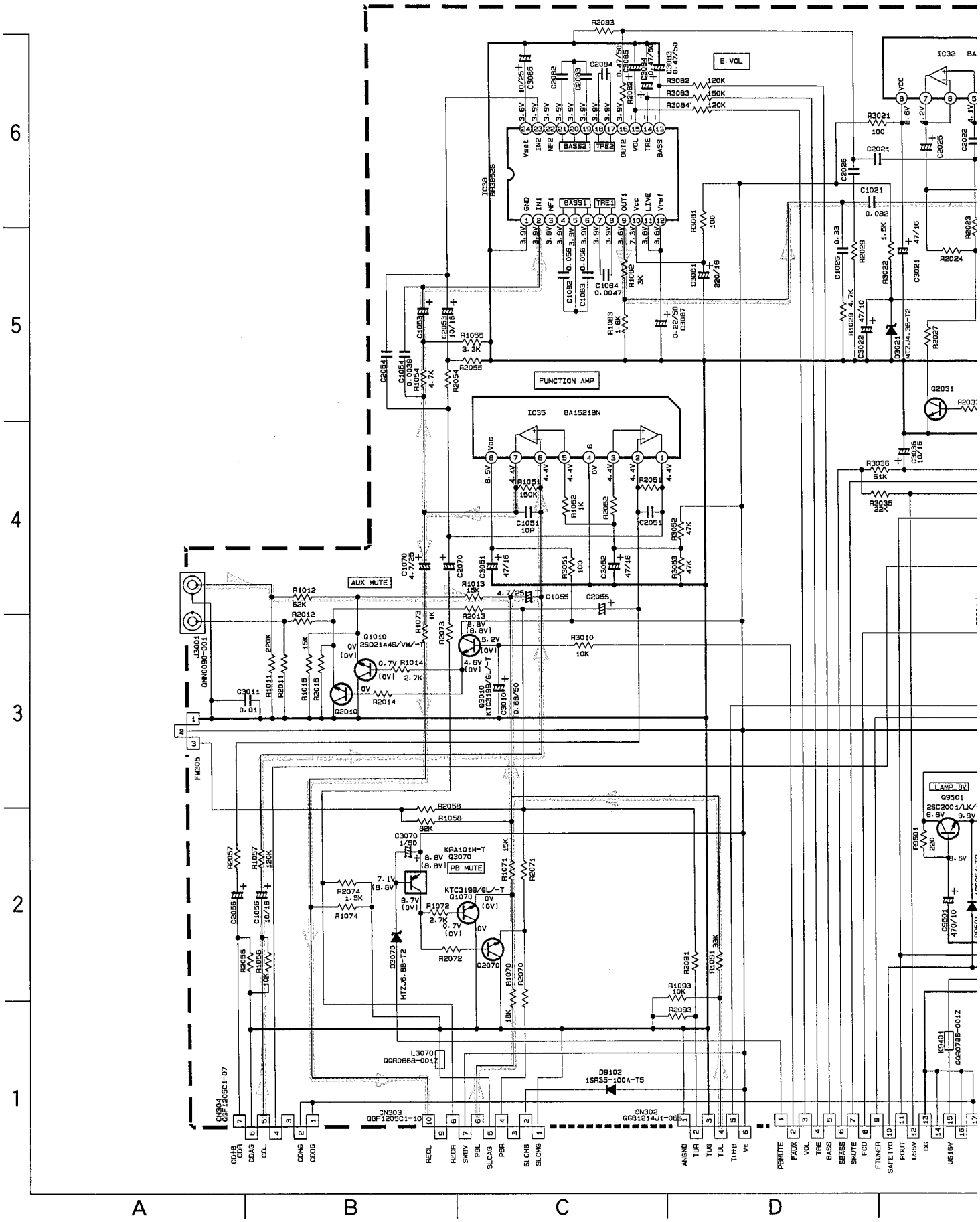

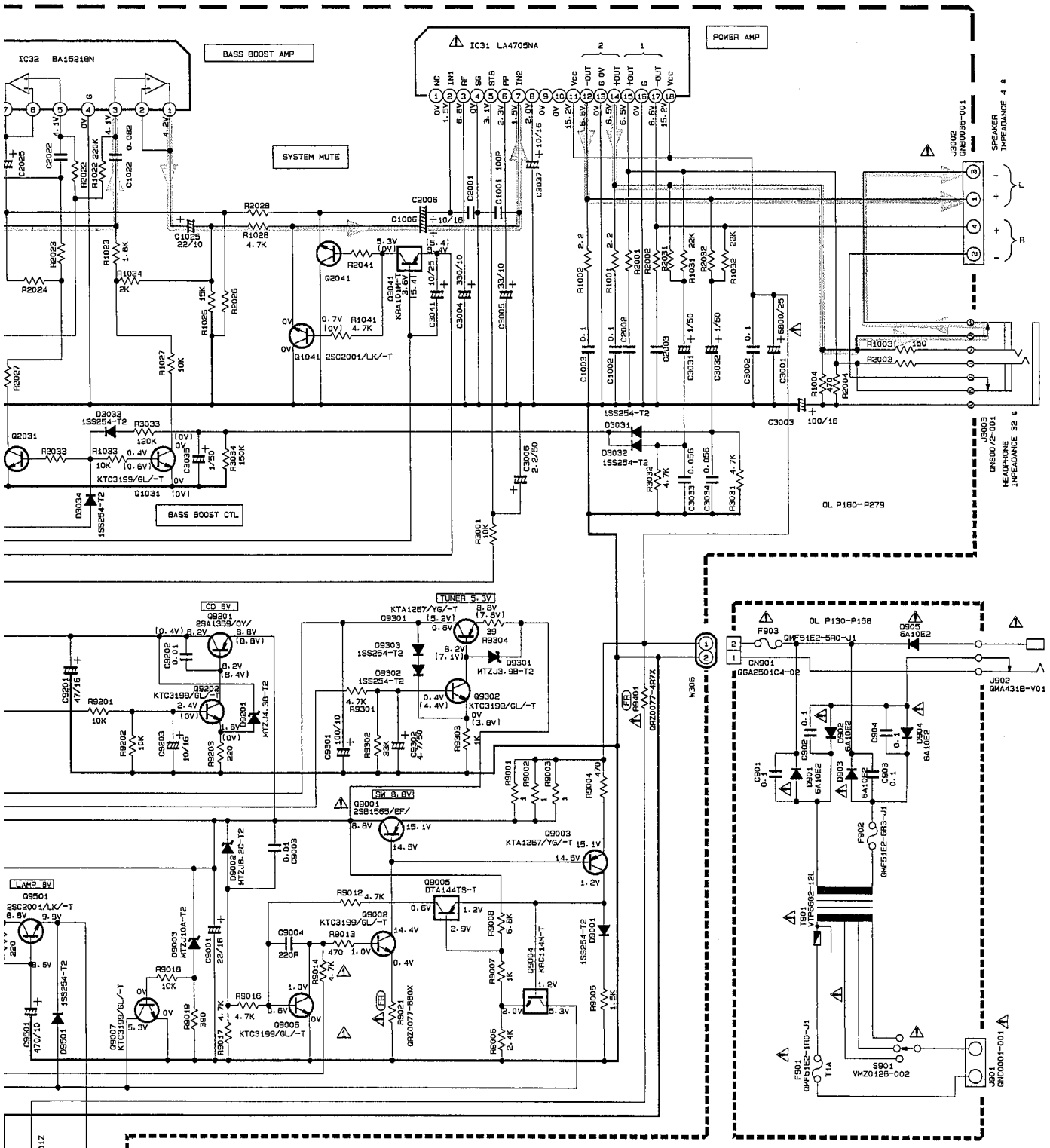
BASS BOOST AMP
IC32 BA15218N
IC31 LA4705NA
POWER AMP
SYSTEM MUTE
BASS BOOST CTL
SPEAKER IMPEDANCE 4 Ω
HEADPHONE IMPEDANCE 32 Ω
OL P160-P279
OL P130-P156
CD 8V
TUNER 5.3V
SW 8.8V
LAMP 8V
NOTES
1. VOLTAGES ARE DC-MEASURED WITH A DIGITAL VOLT METER OR OSCILLOSCOPE WITHOUT INPUT SIGNAL.
CONDITION --- CD STOP MODE
INSIDE BRACKET VALUES ARE OTHER FUNCTIONS
2. UNLESS OTHERWISE SPECIFIED, RESISTORS ARE 1/6W ±5% CARBON RESISTOR.
ALL RESISTANCE VALUES ARE IN OHM(Ω).
ALL CAPACITORS ARE CERAMIC CAPACITOR OR MYLAR CAPACITOR.
ALL CAPACITANCE VALUES ARE IN μF(P=pF).
ALL INDUCTANCE VALUES ARE IN μH(m=mH).
ALL E.CAPACITORS ARE SHOWN IN THE FORM OF CAPACITANCE (μF)/RATED VOLTAGE (V).
ALL DIODES(Dev.Name:1SS254-T2) ARE 1N4148M-T2 OR 1SS254-T2
KRC114M-T
KRA101M-T
DTA144TS-T
Tape Main P. B. signal
REC signal
AUXIN signal
FM radio signal
CD analogue signal
AM radio signal

E | F | G | H | I

■Function Amplifier & Power Amplifier Circuit (UX-T150 UB/UF/US/UX/U)

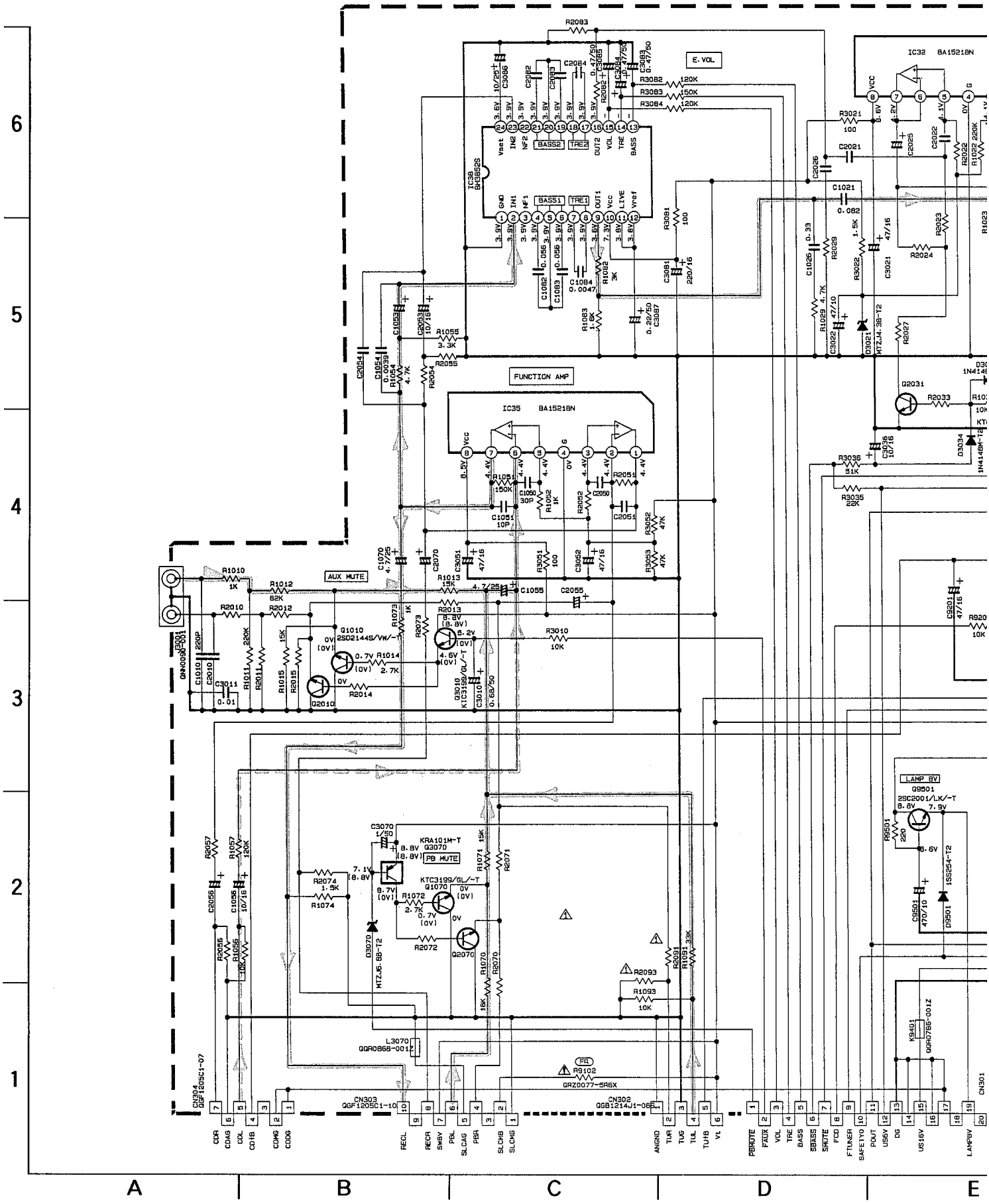

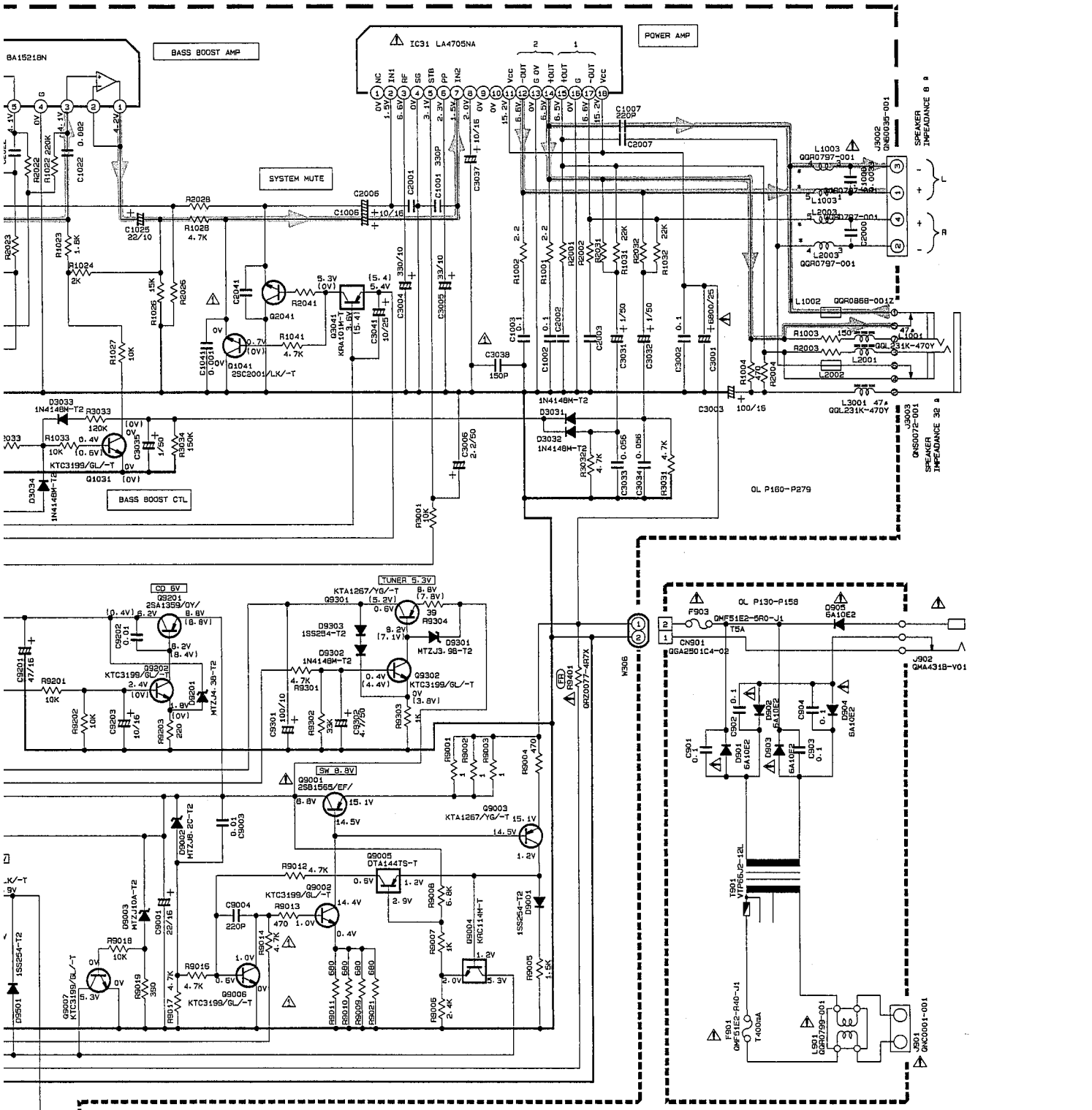

NOTES

1. VOLTAGES ARE DC-MEASURED WITH A DIGITAL VOLT METER OR OSCILLOSCOPE WITHOUT INPUT SIGNAL.
   CONDITION ---- CD STOP MODE
   INSIDE BRACKET VALUES ARE OTHER FUNCTIONS

2. UNLESS OTHERWISE SPECIFIED, RESISTORS ARE 1/6W ±5% CARBON RESISTOR.
   ALL RESISTANCE VALUES ARE IN OHM(Ω).
   ALL CAPACITORS ARE CERAMIC CAPACITOR OR MYLAR CAPACITOR.
   ALL CAPACITANCE VALUES ARE IN μF(P=pF).
   ALL INDUCTANCE VALUES ARE IN μH(m=mH).
   ALL E.CAPACITORS ARE SHOWN IN THE FORM OF CAPACITANCE (μF)/RATED VOLTAGE (V).
   ALL DIODES(Dev.Name:1SS254-T2) ARE 1N4148M-T2 OR 1SS254-T2

E | F | G | H | I

■ CD Servo Control Circuit

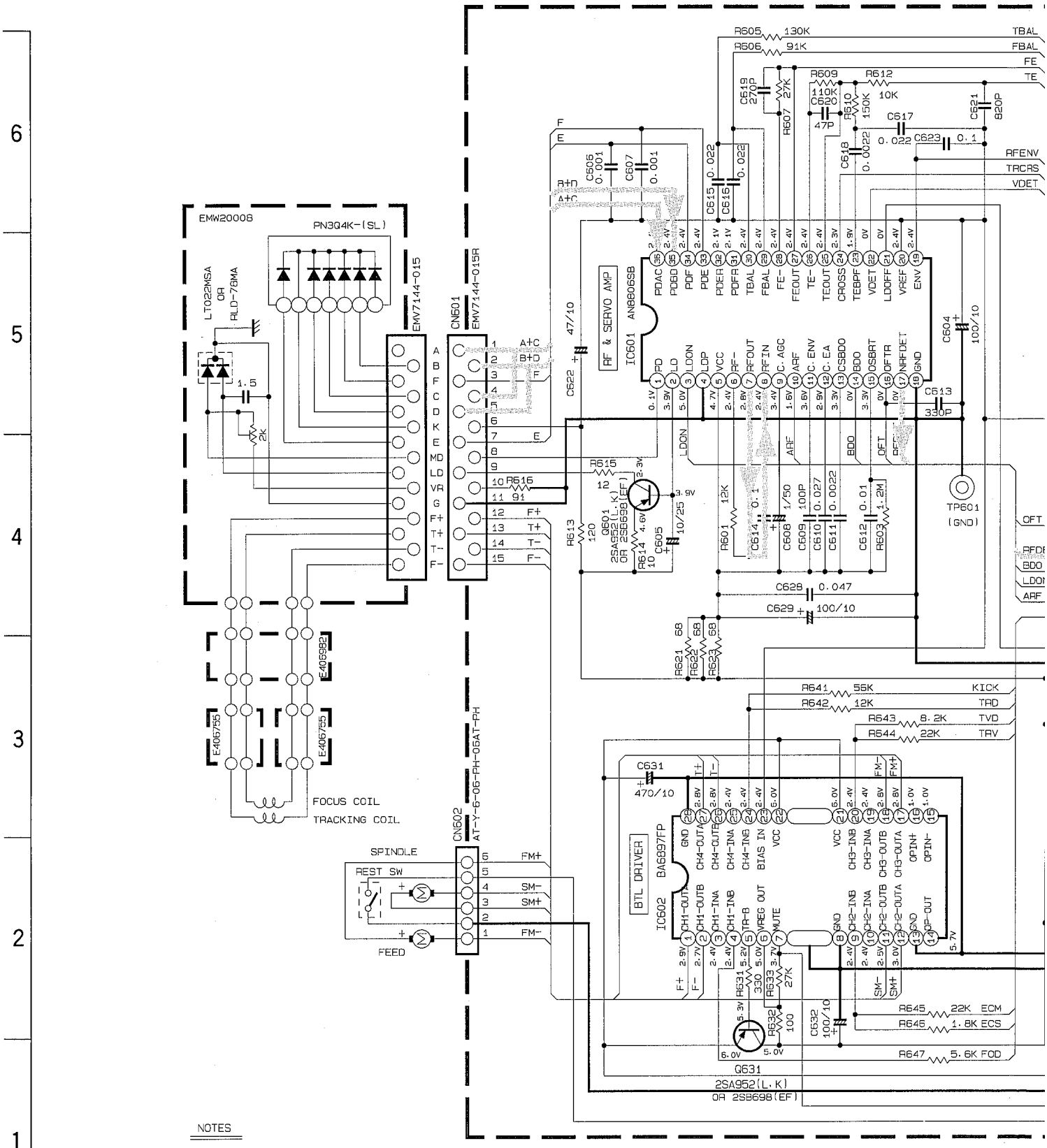

NOTES

1. VOLTAGES ARE DC-MEASURED WITH A DIGITAL VOLT METER
2. UNLESS OTHERWISE SPECIFIED, RESISTORS ARE 1/6W ±5% CARBON RESISTOR.
   ALL RESISTANCE VALUES ARE IN OHM(Ω).
   ALL CAPACITORS ARE CERAMIC CAPACITOR OR MYLAR CAPACITOR.
   ALL CAPACITANCE VALUES ARE IN μF(P=pF).
   ALL E.CAPACITORS ARE SHOWN IN THE FORM OF CAPACITANCE (μF)/RATED VOLTAGE (V).

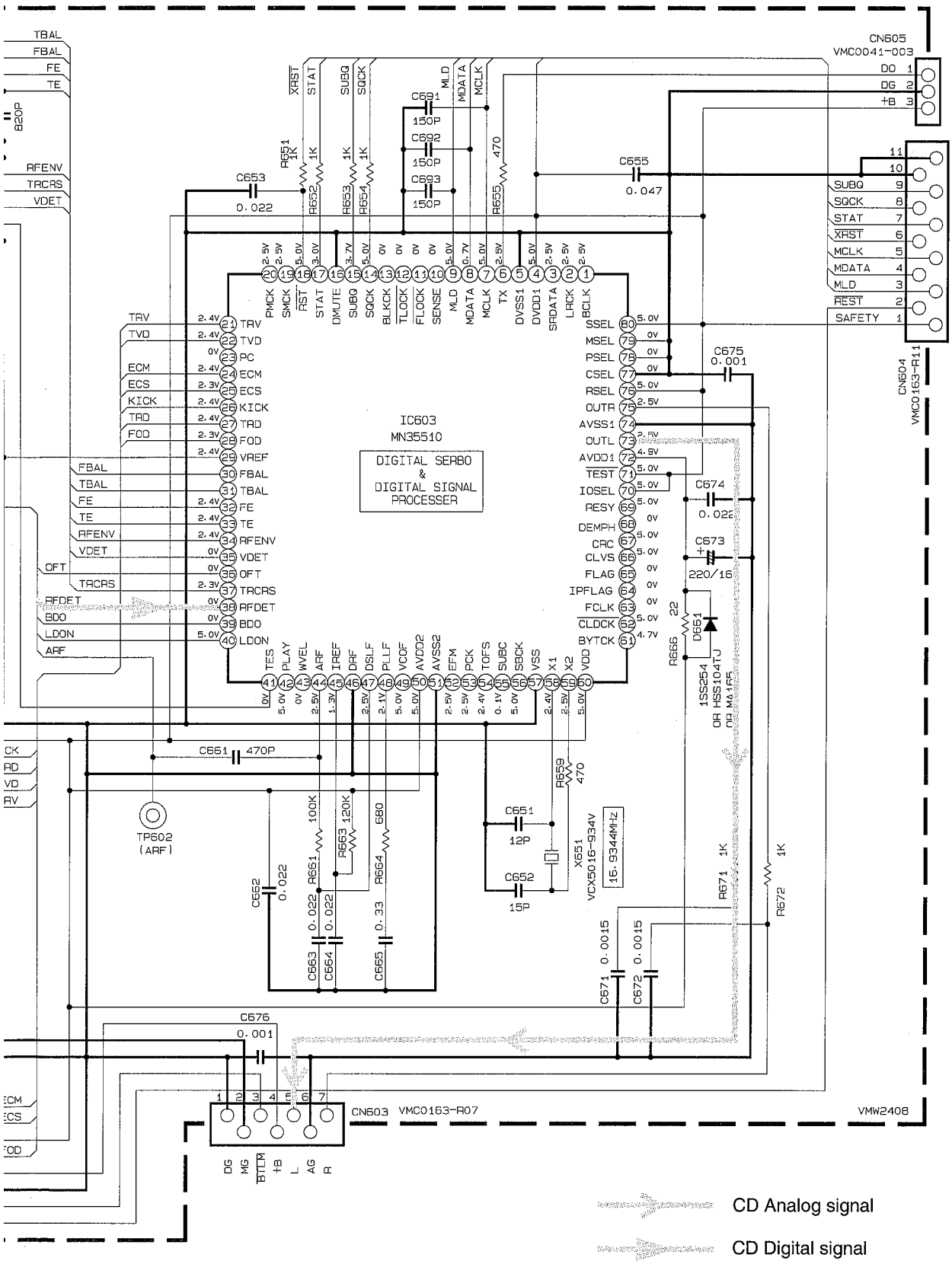
IC603
MN35510
DIGITAL SERBO
&
DIGITAL SIGNAL
PROCESSER
CN605
VMC0041-003
CN604
VMC0163-R11
CN603 VMC0163-R07
VMW2408
TP602
(ARF)
X651
VCX5016-934V
16.9344MHz
D651
1SS254
OR HSS104TJ
OR MA165
CD Analog signal
CD Digital signal

■ Tuner Circuit
(UX-T150/UX-T151 B/E/EN)

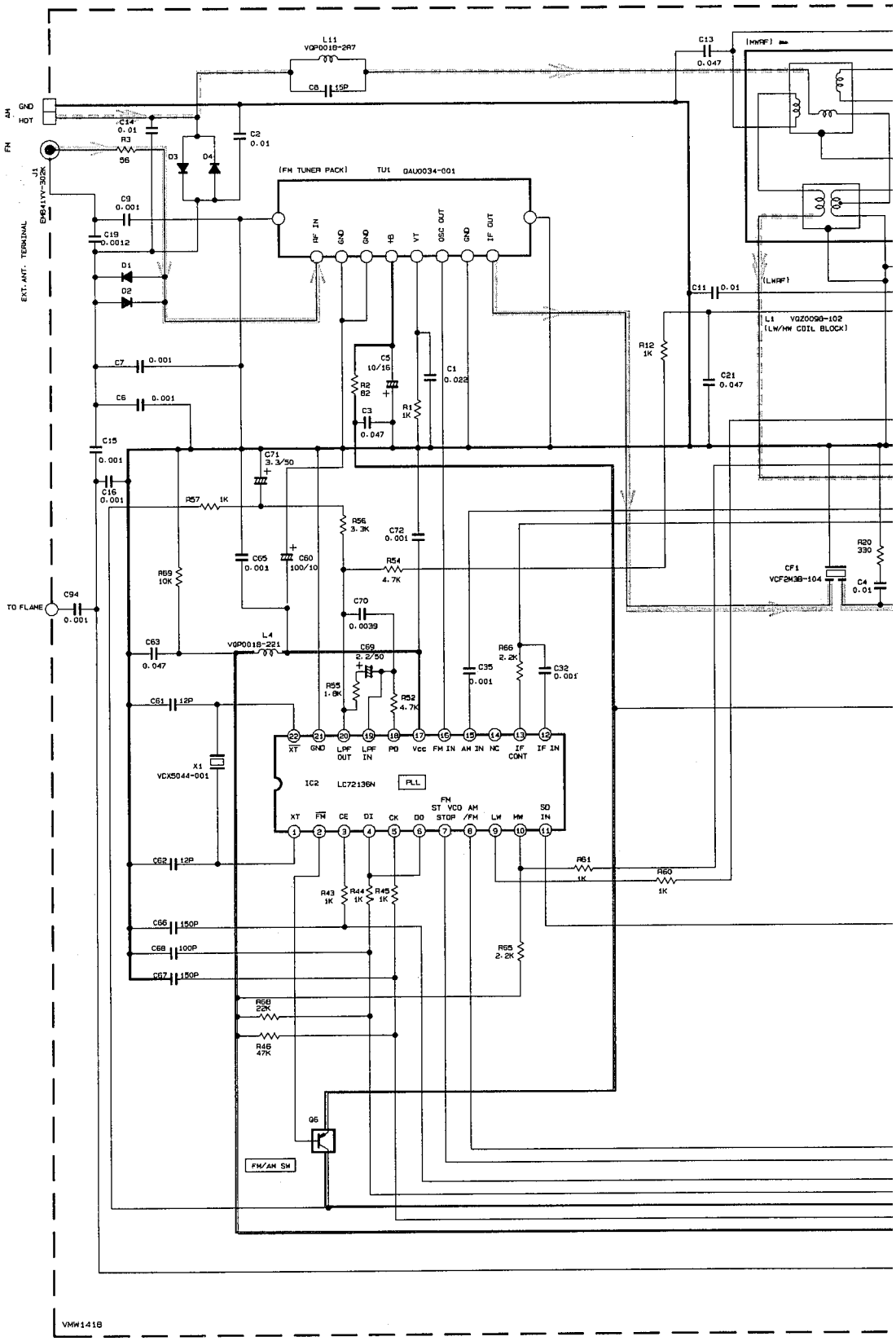

	CONDITION PIN NO.	1	2	3	4	5	6	7	8	9	10	11	12	13	14	15	16	17	18	19	20	21	22	23	24
IC1	FM NO SIGNAL	2.0	0.5	0	2.0	5.1	5.1	0	0	0.3	5.1	5.1	1.1	1.1	4.4	3.7	3.7	1.4	0	1.3	1.1	2.0	2.0	5.1	2.0
	FM 60dB STEREO	2.0	0.5	0	2.0	5.1	5.1	1.1	0	0.3	0	0	1.1	1.1	4.3	4.1	3.7	1.4	0	1.4	1.1	2.0	2.0	5.1	2.0
	AM NO SIGNAL	2.0	0.5	0	2.0	5.0	5.1	0	0	0.3	5.1	5.1	1.1	1.1	4.5	0.1	0	1.4	1.4	1.5	1.6	2.0	2.0	5.1	2.0
IC2	FM NO SIGNAL	2.4	0	0	5.1	4.9	5.1	3.7	3.7	2.0	3.8	5.1	0	0	0	0	2.6	5.1	1.0	1.0	3.7	0	2.7		

Note : VDH1038001TW(/s/G)

NOTES

1. VOLTAGES ARE DC-MEASURED WITH A DIGITAL VOLT METER.
2. ALL RESISTORS ARE 1/8W±5% METAL GLAZE RESISTOR.
3. ALL RESISTANCE VALUES ARE IN OHM(Ω).
4. ALL CAPASITANCE VALUES ARE IN μF(P=pF).
5. ALL E. CAPASITORS ARE SHOWN IN THE FORM OF CAPASITANCE (μF)/RATED VOLTAGE (V).
6. SI. DIODES(▶|) ARE ALL 1SS254T THAT CAN BE CHANGED TO SIMILAR DIODE SUCH AS MA165 OR HSS104J.
7. PARTS NO. OF TRANSISTORS ARE AS FOLLOWS.

Q1	2SC2668(D)	Q3, 4	KTC3199(GL)-T
Q2, 6	DTA114YKA-X	Q7, 8	2SA1037K(R)T146

8. INSIDE OF DIGITAL TRANSISTORS ARE SHOWN AS FOLLOWS.

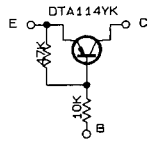

9. LAST NO. BLANK NO.

R75	R	4-9, 11, 14, 17-19, 28, 32, 33, 40, 41, 47, 49-51, 53, 58, 59, 62-64, 67, 68, 70-73
C94	C	10, 17, 20, 22-29, 38, 48, 54, 56-59, 64, 73-90

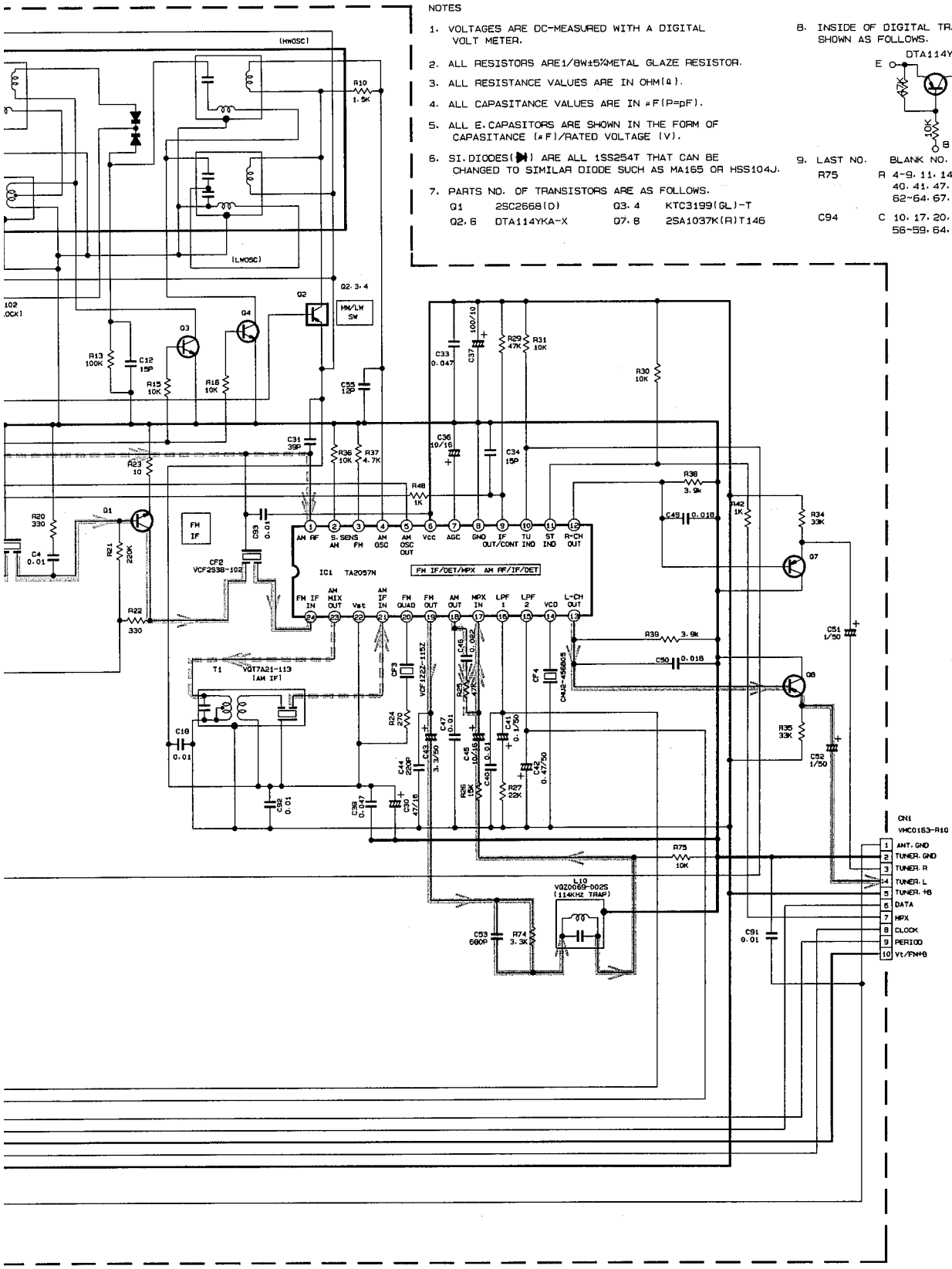

3	24
.1	2.0
.1	2.0
.1	2.0

Tr NO.	Q1			Q6			Q7			Q8		
PIN NO.	E	C	B	E	C	B	E	C	B	E	C	B
FM 87.5MHz NO SIGNAL	0	7.5	0.7	8.8	8.7	0	1.6	0	1.1	1.6	0	1.1
AM 522KHz NO SIGNAL	0	0	0	8.8	0	8.7	1.6	0	1.1	1.6	0	1.1

Tr NO.	Q2			Q3			Q4		
PIN NO.	E	C	B	E	C	B	E	C	B
AM 522KHz NO SIGNAL	2.0	2.0	0.1	0	0	0.7	0	0	0.7
AM 144KHz NO SIGNAL	2.0	2.0	2.0	0	0	0.1	0	0	0.1

FM Radio signal
AM Radio signal
+B Line

E | F | G | H | I

■ Tuner Circuit (UX-T150 EE)

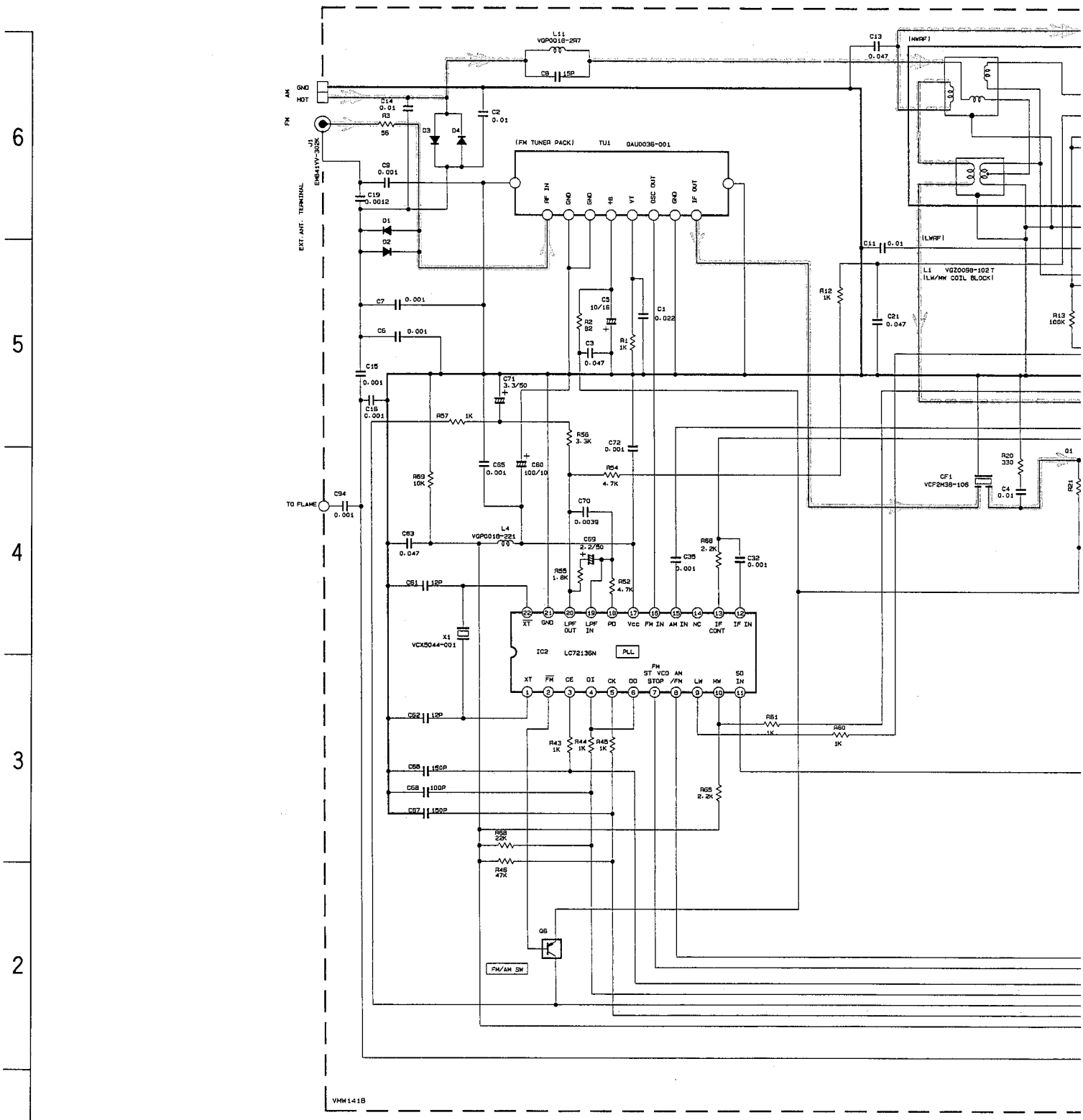

	CONDITION PIN NO.	1	2	3	4	5	6	7	8	9	10	11	12	13	14	15	16	17	18	19	20	21	22	23	24
IC1	FM NO SIGNAL	2.0	0.5	0	2.0	5.1	5.1	0	0	0.3	5.1	5.1	1.1	1.1	4.4	3.7	3.7	1.4	0	1.3	1.1	2.0	2.0	5.1	2.0
	FM 60dB STEREO	2.0	0.5	0	2.0	5.1	5.1	1.1	0	0.3	0	0	1.1	1.1	4.3	4.1	3.7	1.4	0	1.4	1.1	2.0	2.0	5.1	2.0
	AM NO SIGNAL	2.0	0.5	0	2.0	5.0	5.1	0	0	0.3	5.1	5.1	1.1	1.1	4.5	0.1	0	1.4	1.4	1.5	1.6	2.0	2.0	5.1	2.0
IC2	FM NO SIGNAL	2.4	0	0	5.1	4.9	5.1	3.7	3.7	2.0	3.8	5.1	0	0	0	0	2.6	5.1	1.0	1.0	3.7	0	2.7		

T	
P1	
FM 87.5	
AM 522K	
T	
P1	
AM 522K	
AM 144K	

NOTES

1. VOLTAGES ARE DC-MEASURED WITH A DIGITAL VOLT METER.
2. ALL RESISTORS ARE 1/8W±5% METAL GLAZE RESISTOR.
3. ALL RESISTANCE VALUES ARE IN OHM(Ω).
4. ALL CAPASITANCE VALUES ARE IN μF(P=pF).
5. ALL E.CAPASITORS ARE SHOWN IN THE FORM OF CAPASITANCE (μF)/RATED VOLTAGE (V).
6. SI.DIODES( ) ARE ALL 1SS254T THAT CAN BE CHANGED TO SIMILAR DIODE SUCH AS MA165 OR HSS104J.
7. PARTS NO. OF TRANSISTORS ARE AS FOLLOWS.

Q1	2SC2668(O)	Q3, 4	KTC3199(GL)-T
Q2, 6	DTA114YKA-X	Q7, 8	2SA1037K(R)T146

8. INSIDE OF DIGITAL TRANSISTORS ARE SHOWN AS FOLLOWS.

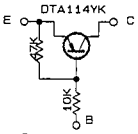

9. LAST NO. BLANK NO.

R75	R 4~9, 11, 14, 17~19, 29, 32, 33, 40, 41, 47, 49~51, 53, 58, 59, 62~64, 67, 68, 70~73
C94	C 10, 17, 20, 22~29, 38, 48, 54, 56~59, 64, 73~90

Tr NO.	Q1			Q5			Q7			Q8		
PIN NO.	E	C	B	E	C	B	E	C	B	E	C	B
FM 87.5MHz NO SIGNAL	0	7.5	0.7	8.8	8.7	0	1.5	0	1.1	1.6	0	1.1
AM 522KHz NO SIGNAL	0	0	0	8.8	0	8.7	1.5	0	1.1	1.5	0	1.1

Tr NO.	Q2			Q3			Q4		
PIN NO.	E	C	B	E	C	B	E	C	B
AM 522KHz NO SIGNAL	2.0	2.0	0.1	0	0	0.7	0	0	0.7
AM 144KHz NO SIGNAL	2.0	2.0	2.0	0	0	0.1	0	0	0.1

FM Radio Signal

MW Radio Signal

LW Radio Signal

E | F | G | H | I

■ Tuner Circuit (UX-T150 UB/UF/US/UX/U)

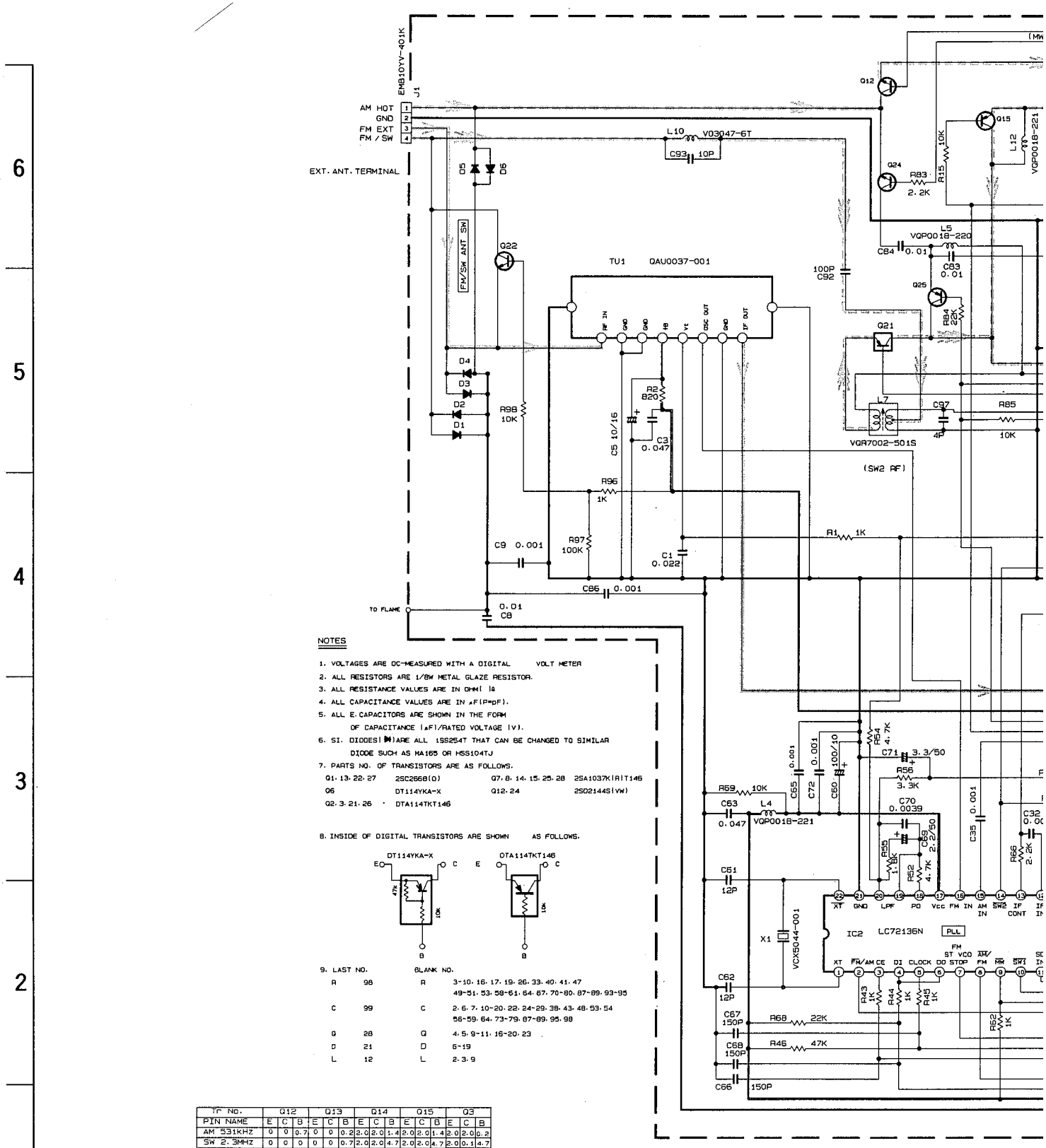

NOTES

1. VOLTAGES ARE DC-MEASURED WITH A DIGITAL VOLT METER
2. ALL RESISTORS ARE 1/8W METAL GLAZE RESISTOR.
3. ALL RESISTANCE VALUES ARE IN OHM(Ω
4. ALL CAPACITANCE VALUES ARE IN μF(P=pF).
5. ALL E.CAPACITORS ARE SHOWN IN THE FORM OF CAPACITANCE (μF)/RATED VOLTAGE (V).
6. SI. DIODES(▶)ARE ALL 1SS254T THAT CAN BE CHANGED TO SIMILAR DIODE SUCH AS MA165 OR HSS104TJ
7. PARTS NO. OF TRANSISTORS ARE AS FOLLOWS.

Q1. 13. 22. 27	2SC2668(O)	Q7. 8. 14. 15. 25. 28	2SA1037K(R)T146
Q6	DT114YKA-X	Q12. 24	2SD2144S(VW)
Q2. 3. 21. 26	DTA114TKT146		

8. INSIDE OF DIGITAL TRANSISTORS ARE SHOWN AS FOLLOWS.

9. LAST NO. BLANK NO.

R	98	R	3-10. 16. 17. 19. 26. 33. 40. 41. 47 49-51. 53. 58-61. 64. 67. 70-80. 87-89. 93-95
C	99	C	2. 6. 7. 10-20. 22. 24-29. 38. 43. 48. 53. 54 56-59. 64. 73-79. 87-89. 95. 98
Q	28	Q	4. 5. 9-11. 16-20. 23
D	21	D	6-19
L	12	L	2. 3. 9

Tr No.	Q12			Q13			Q14			Q15			Q3		
PIN NAME	E	C	B	E	C	B	E	C	B	E	C	B	E	C	B
AM 531KHZ	0	0	0.7	0	0	0.2	2.0	2.0	1.4	2.0	2.0	1.4	2.0	2.0	0.2
SW 2.3MHZ	0	0	0	0	0	0.7	2.0	2.0	4.7	2.0	2.0	4.7	2.0	0.1	4.7

Tr No.	Q1			Q6			Q22			Q7			Q8		
PIN NAME	E	C	B	E	C	B	E	C	B	E	C	B	E	C	B
FM 87.5MHZ	0	7.5	0.7	8.8	8.8	0	0	0	0.7	1.6	0	1.1	1.6	0	1.1
AM 531KHZ	0	0	0	8.8	0	8.7	0	0	0	1.6	0	1.1	1.6	0	1.1

Tr No.	Q21			Q24			Q25			Q26			Q27			Q28			Q2		
PIN NAME	E	C	B	E	C	B	E	C	B	E	C	B	E	C	B	E	C	B	E	C	B
SW 2.3MHZ	2.0	2.0	5.1	0	0	0.7	2.0	2.0	1.4	2.0	2.0	0.1	0	0	0.1	2.0	2.0	5.1	2.0	2.0	0.1
SW 7MHZ	2.0	2.0	0	0	0	0	2.0	2.0	4.3	2.0	2.0	4.3	0	0	0.7	2.0	2.0	1.3	2.0	0.3	4.3

	CONDITION PIN NO.	1	2	3	4	5	6	7	8	9	10	11	12
IC1	FM NO SIGNAL	2.0	0.5	0	2.0	5.1	5.1	0	0	0.3	5.1	5.1	1.1
	FM 50dB STEREO	2.0	0.5	0	2.0	5.1	5.1	1.1	0	0.3	0	0	1.1
	AM NO SIGNAL	2.0	0.5	0	2.0	5.1	5.1	0	0	0.3	5.1	5.1	1.1
IC2	FM NO SIGNAL	2.4	0	0	1.1	5.0	1.1	3.7	3.7	4.5	4.3	5.1	0

Note: VDH1038401TW(s/G)

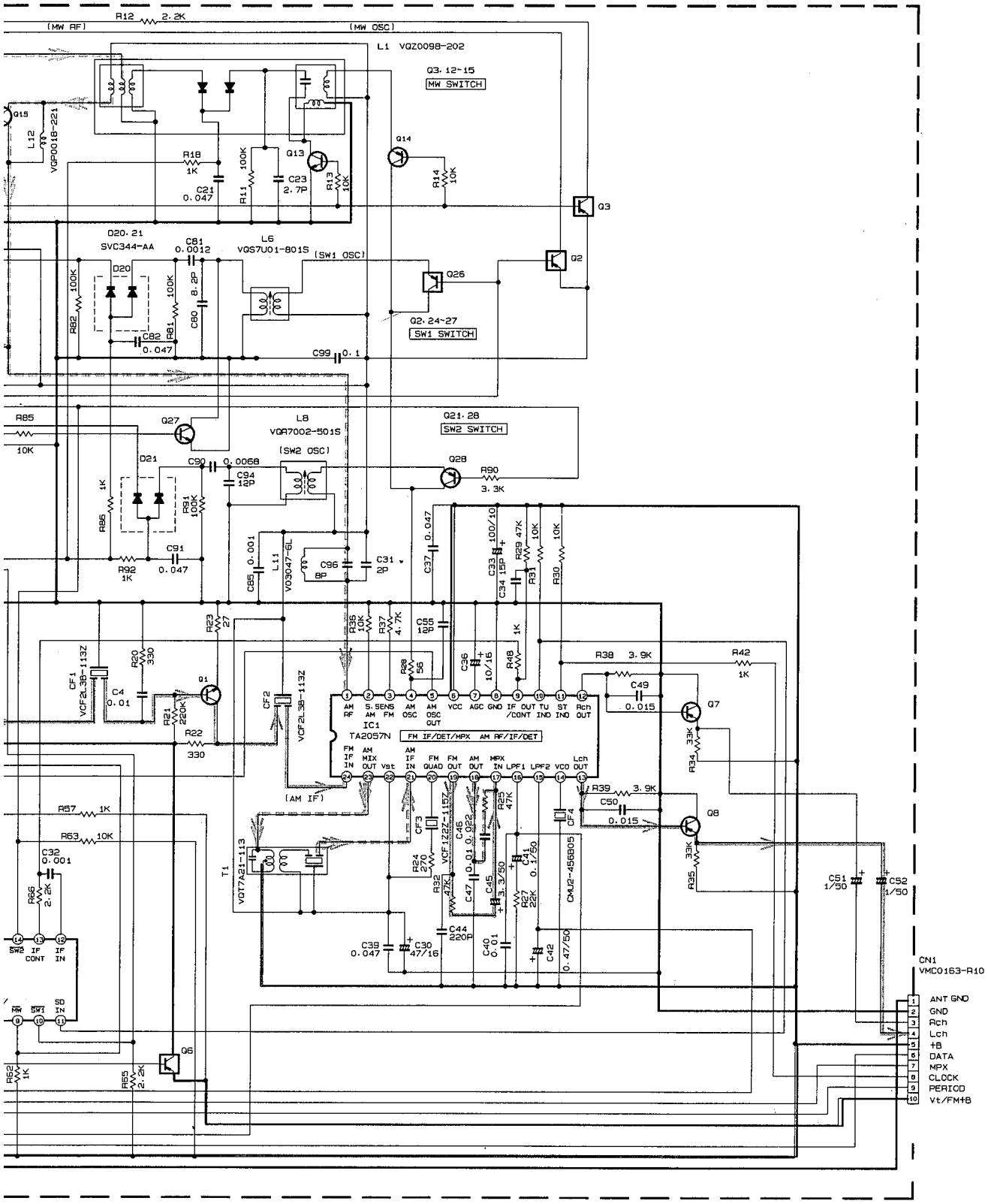

11	12	13	14	15	16	17	18	19	20	21	22	23	24
5.1	1.1	1.1	4.4	3.7	3.7	1.4	0	1.3	1.1	2.0	2.0	5.1	2.0
0	1.1	1.1	4.3	4.1	3.7	1.4	0	1.4	1.1	2.0	2.0	5.1	2.0
5.1	1.1	1.1	4.5	0.1	0	1.4	1.4	1.5	1.6	2.0	2.0	5.1	2.0
5.1	0	0	5.1	0	2.6	5.1	1.0	1.0	3.7	0	2.7		

SW Radio Signal

MW Radio Signal

FM Radio Signal

+B Line

E	F	G	H	I

■ MIC Amplifier Circuit (UX-T150 UB/UF/US/UX/U)

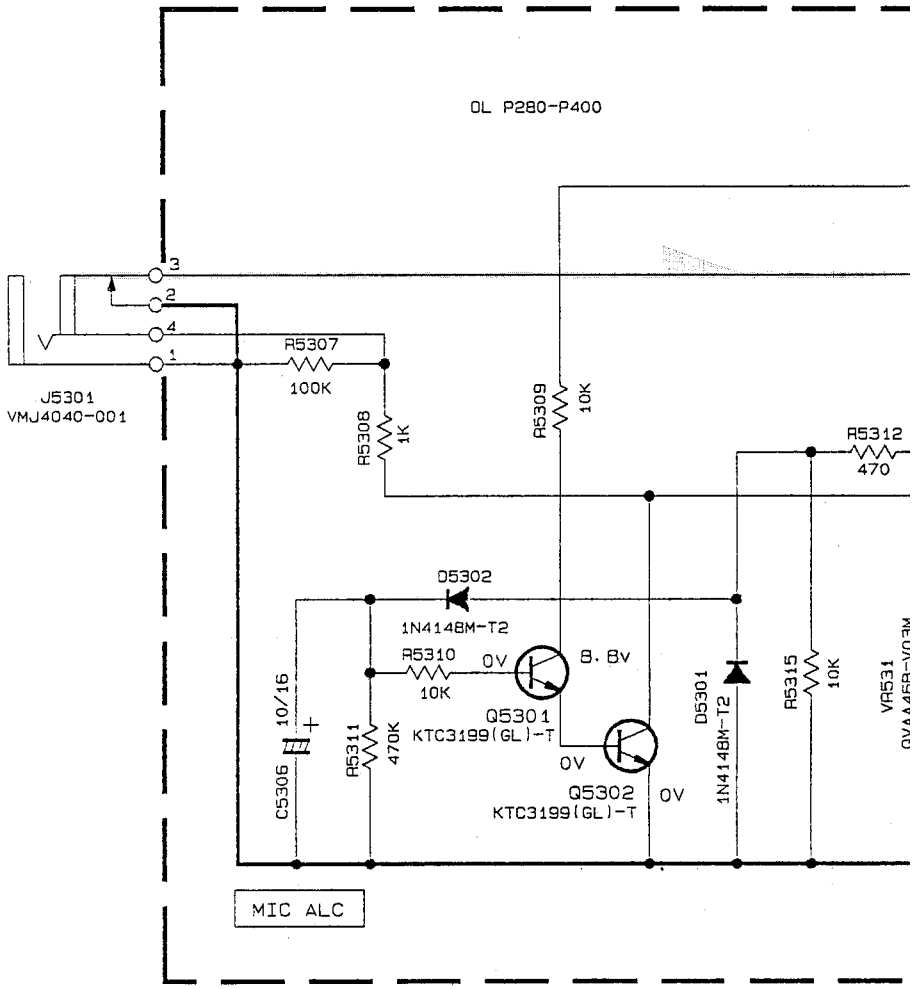

NOTES

1. VOLTAGES ARE DC-MEASURED WITH A DIGITAL VOLT METER OR OSCILLOSCOPE WITHOUT INPUT SIGNAL.
   CONDITION --- CD STOP MODE
   INSIDE BRACKET VALUES ARE OTHER FUNCTIONS

2. UNLESS OTHERWISE SPECIFIED, RESISTORS ARE 1/6W ±5% CARBON RESISTOR.
   ALL RESISTANCE VALUES ARE IN OHM(Ω).
   ALL CAPACITORS ARE CERAMIC CAPACITOR OR MYLAR CAPACITOR.
   ALL CAPACITANCE VALUES ARE IN μF(P=pF).
   ALL INDUCTANCE VALUES ARE IN μH(m=mH).
   ALL E.CAPACITORS ARE SHOWN IN THE FORM OF CAPACITANCE (μF)/RATED VOLTAGE (V).

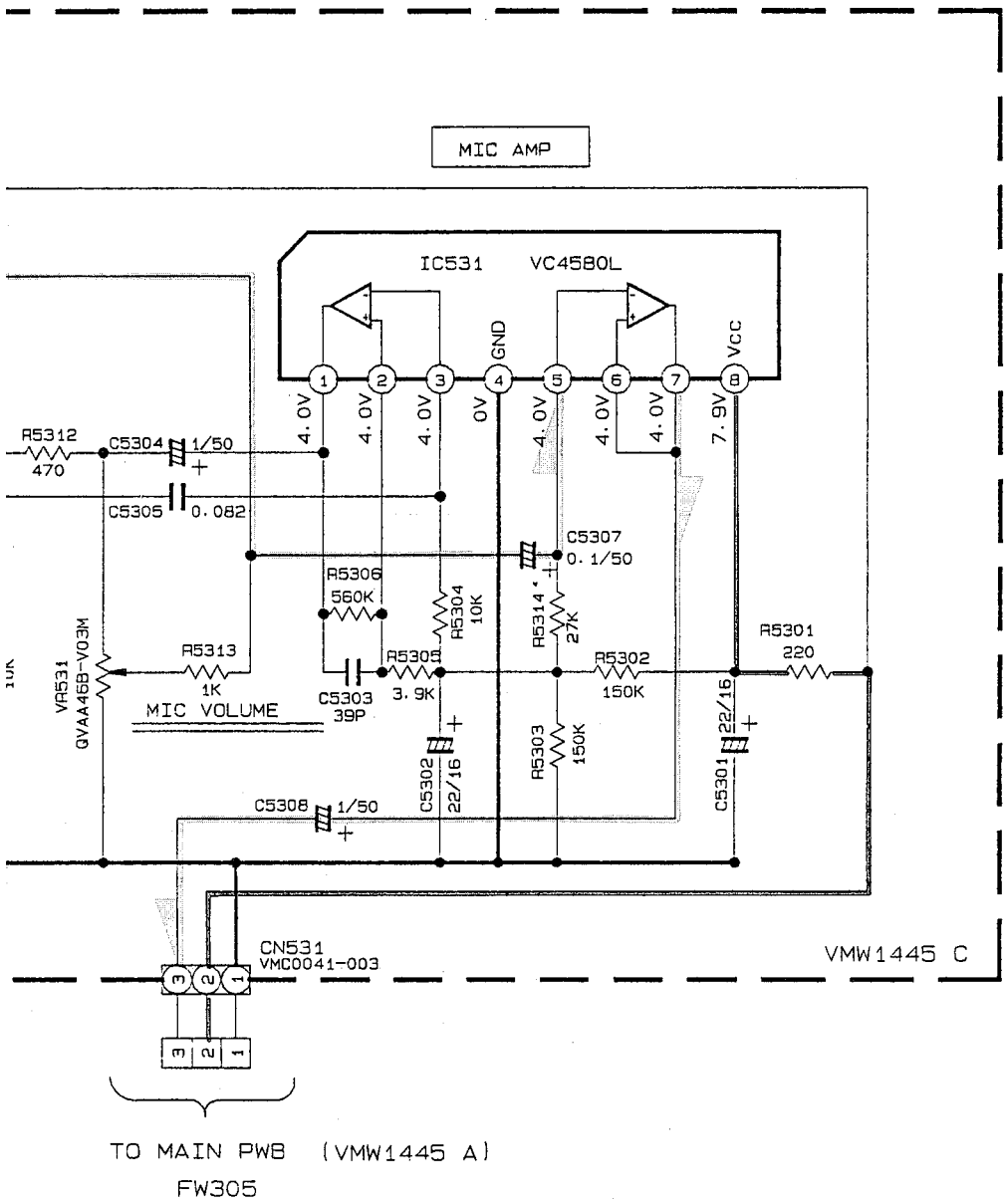
MIC AMP
IC531 VC4580L
GND
Vcc
4.0V
4.0V
4.0V
0V
4.0V
4.0V
4.0V
7.9V
R5312
470
C5304
1/50
C5305
0.082
C5307
0.1/50
R5306
560K
R5304
10K
R5314*
27K
R5301
220
R5313
1K
R5305
3.9K
R5302
150K
VR531
GVAA46B-V03M
MIC VOLUME
C5303
39P
R5303
150K
C5302
22/16
C5301
22/16
C5308
1/50
CN531
VMC0041-003
VMW1445 C
TO MAIN PWB (VMW1445 A)
FW305
MIC signal
+B

Location of P. C. Board Parts

■ Main Board (UX-T150/UX-T151 B/E/EN): Block No. 01

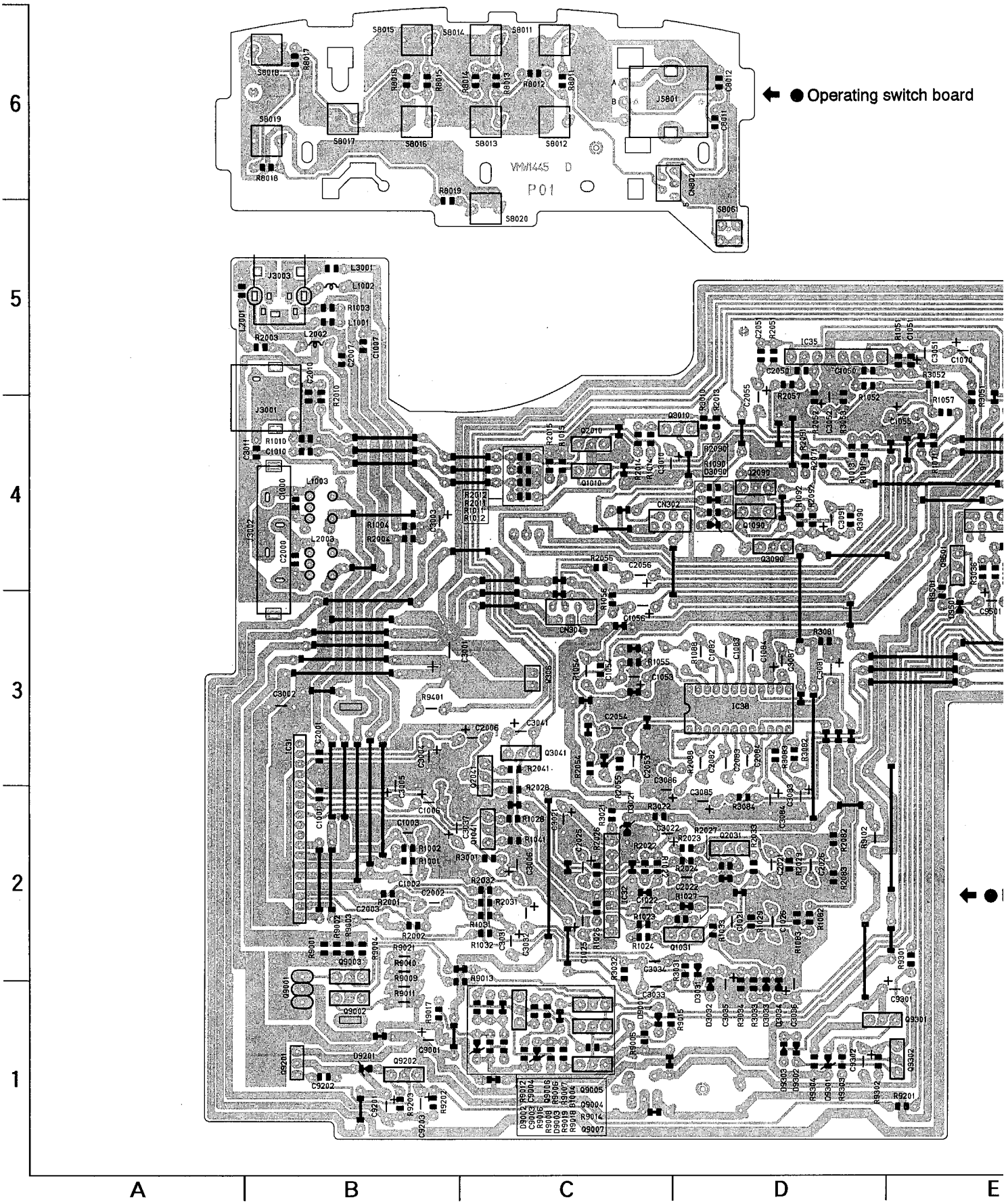

ard

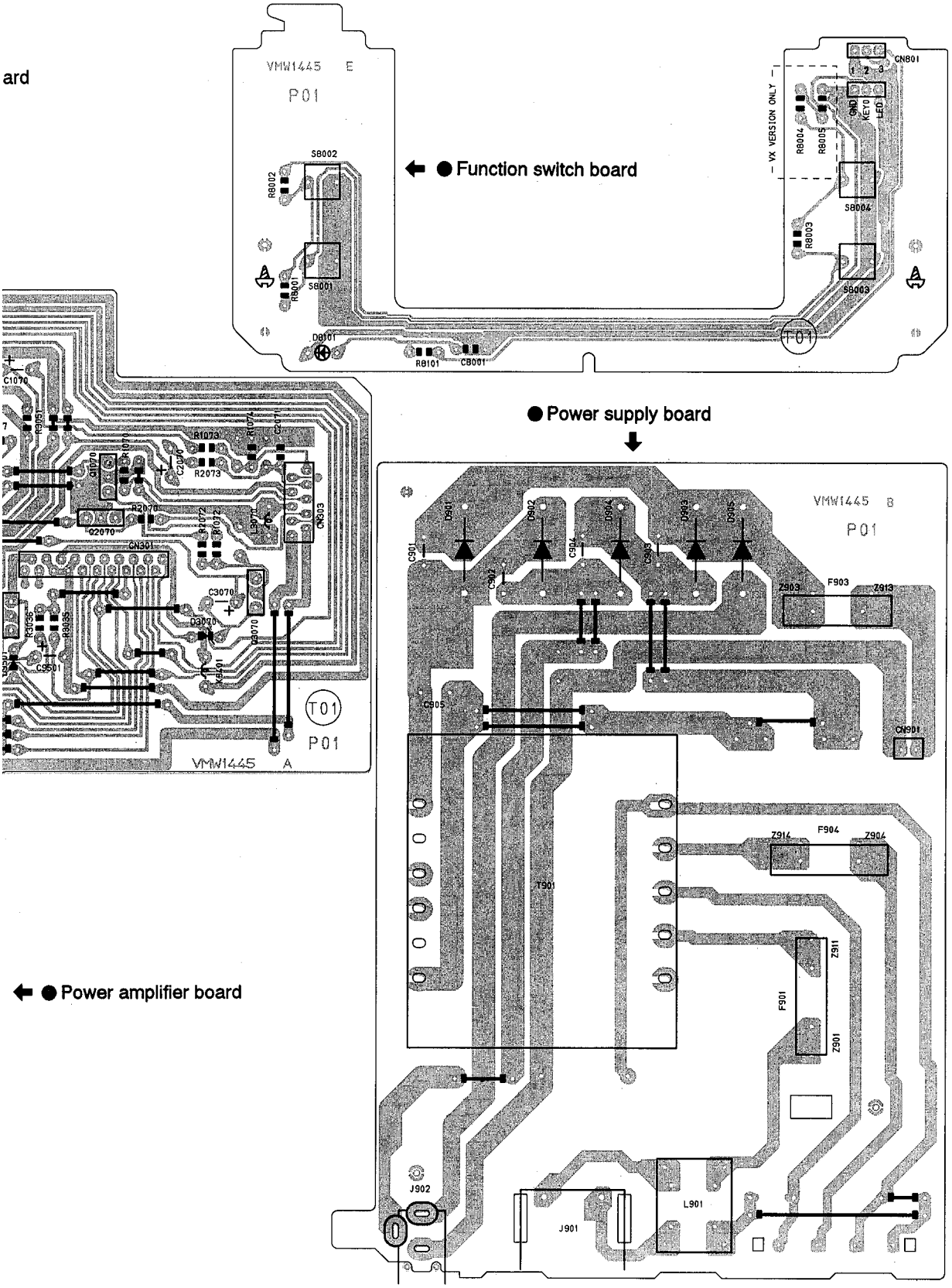

● Function switch board

● Power supply board

● Power amplifier board

E | F | G | H | I

■ Main Board (UX-T150 EE): Block No. 01

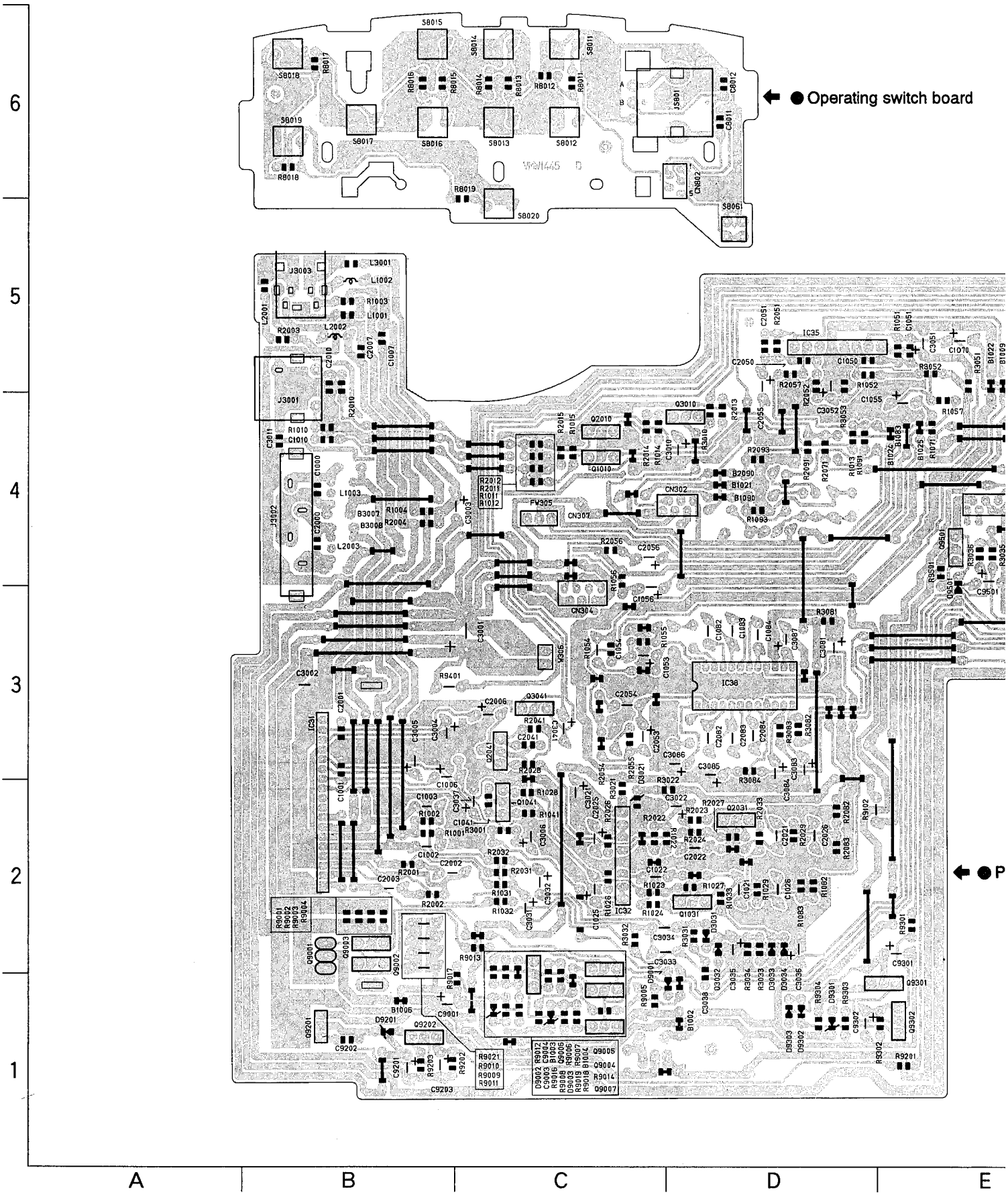

ard

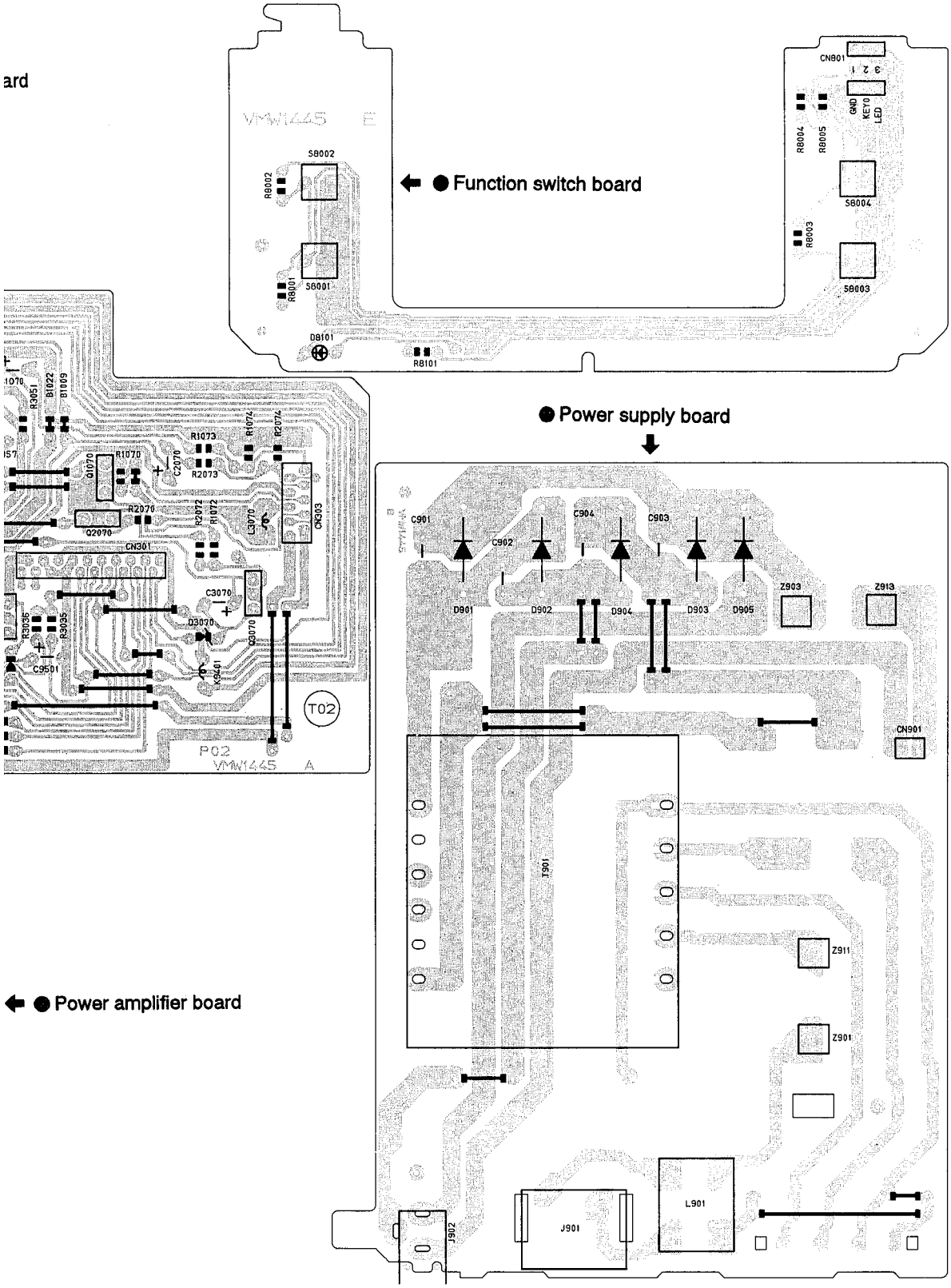
VMW1445 E
SB002
R8002
SB001
R8001
D8101
R8101
CN801
3 2 1
GND
KEY0
LED
R8004
R8005
SB004
R8003
SB003
● Function switch board
● Power supply board
C901
C902
C904
C903
D901
D902
D904
D903
D905
Z903
Z913
CN901
F901
Z911
Z901
L901
J901
J902
R3051
B1022
B1009
R1073
R1074
R2074
Q1070
R1070
C2070
R2073
R2070
Q2070
R2072
R1072
L3070
CN303
CN301
C3070
D3070
R3070
R3036
R3035
C9501
K9401
T02
P02
VMW1445 A
● Power amplifier board

E	F	G	H	I

■ Main Board (UX-T150 UB/UF/US/UX/U): Block No. 02

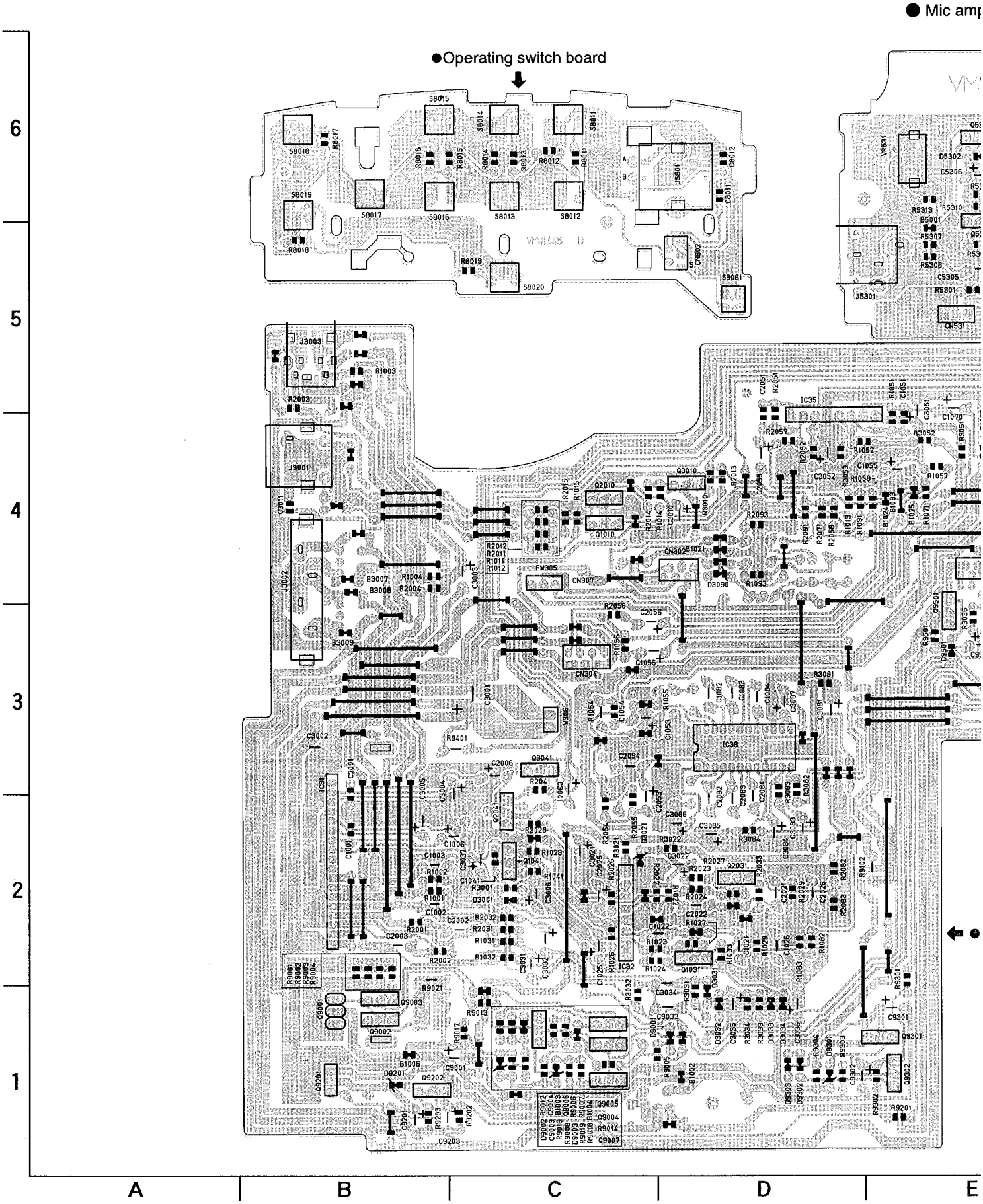

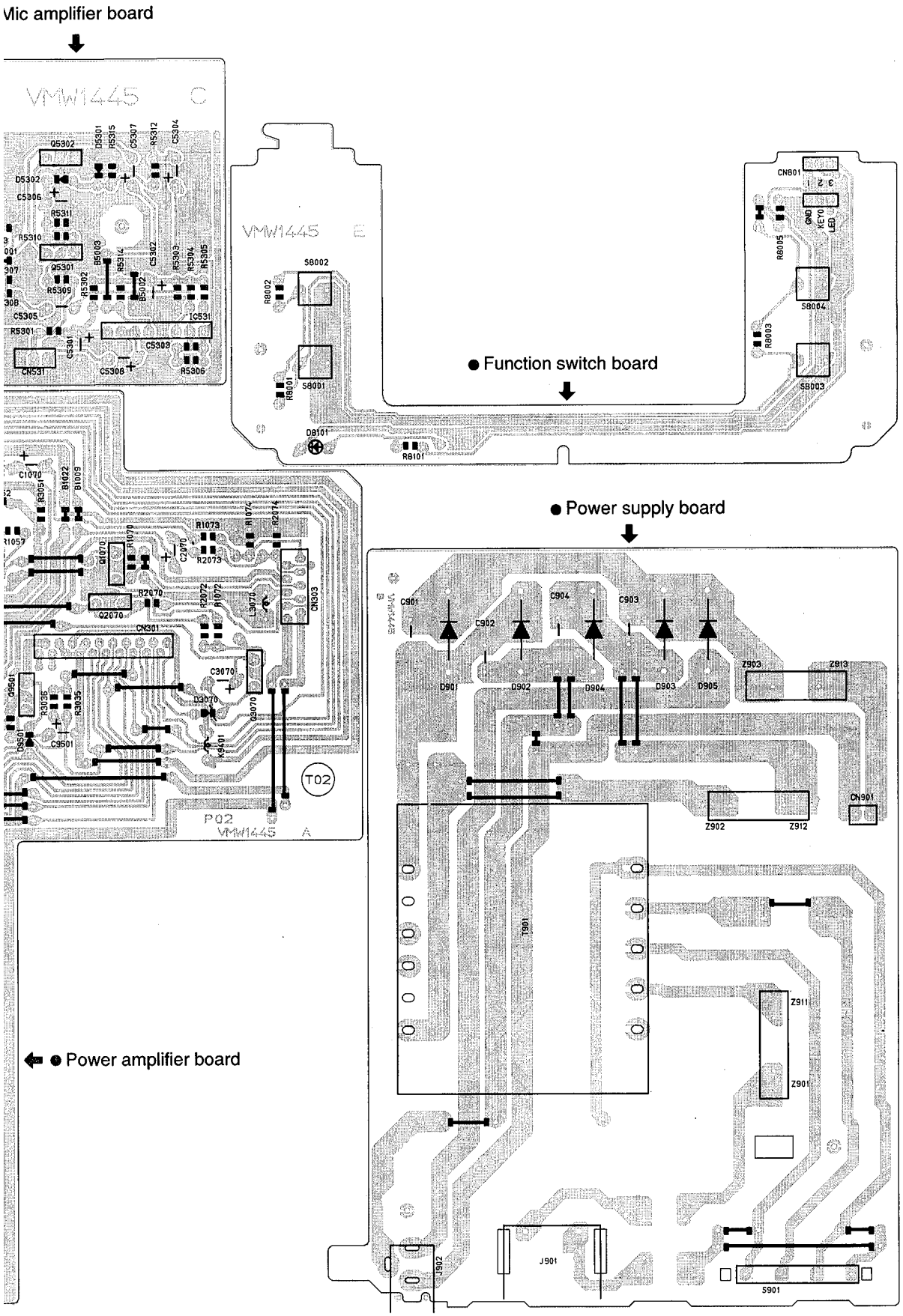
Mic amplifier board
VMW1445 C
VMW1445 E
● Function switch board
● Power supply board
● Power amplifier board
P02
VMW1445 A
T02
VMW1445 B

■LCD & System CPU Board (UX-T150/UX-T151 B/E/EE/EN): Block No. 03

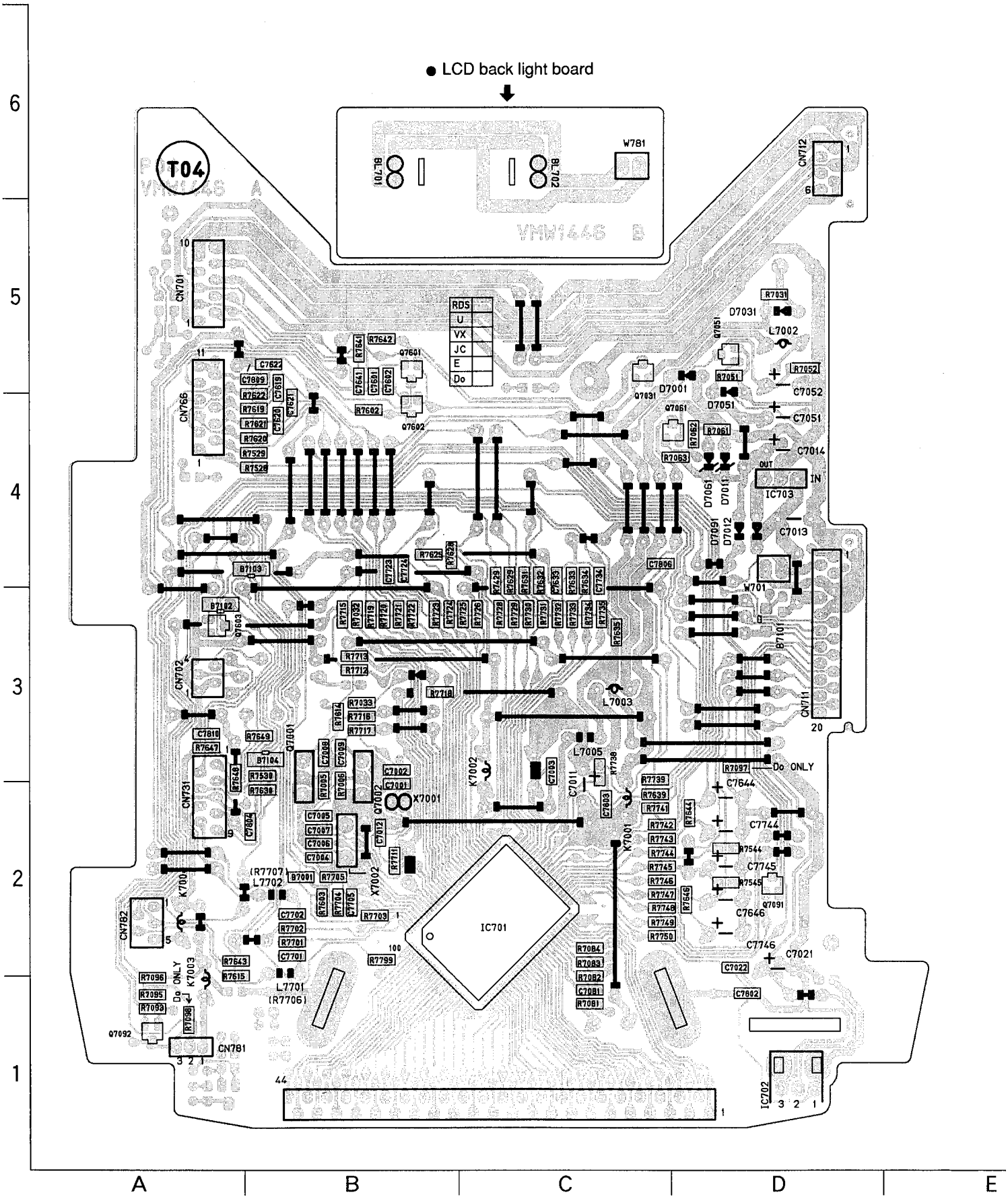

(UX-T150 UB/UF/US/UX/U): Block No. 04

● LCD back light board

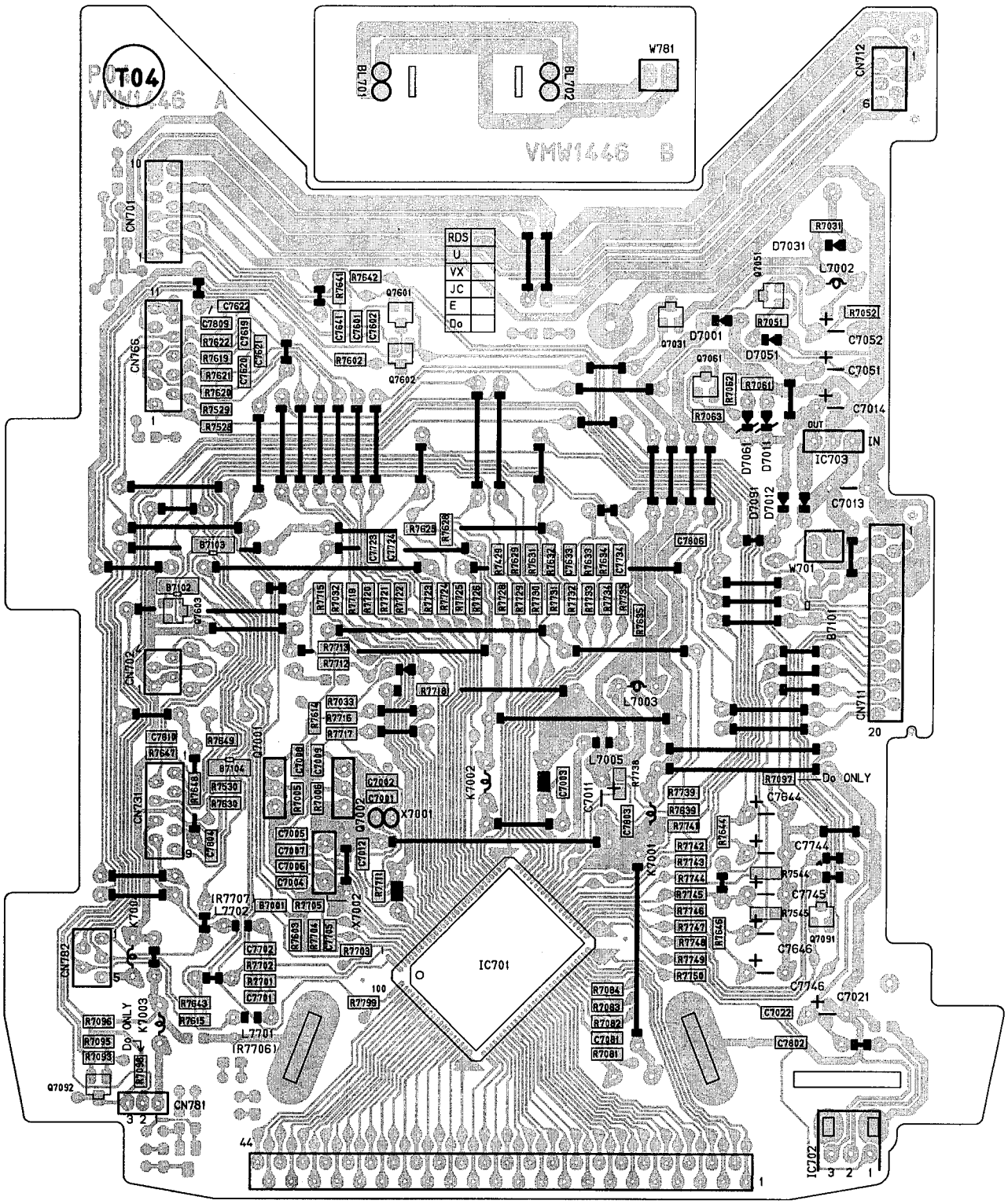

E	F	G	H	I

■Tuner Board (UX-T150/UX-T151 B/E/EN): Block No. 05

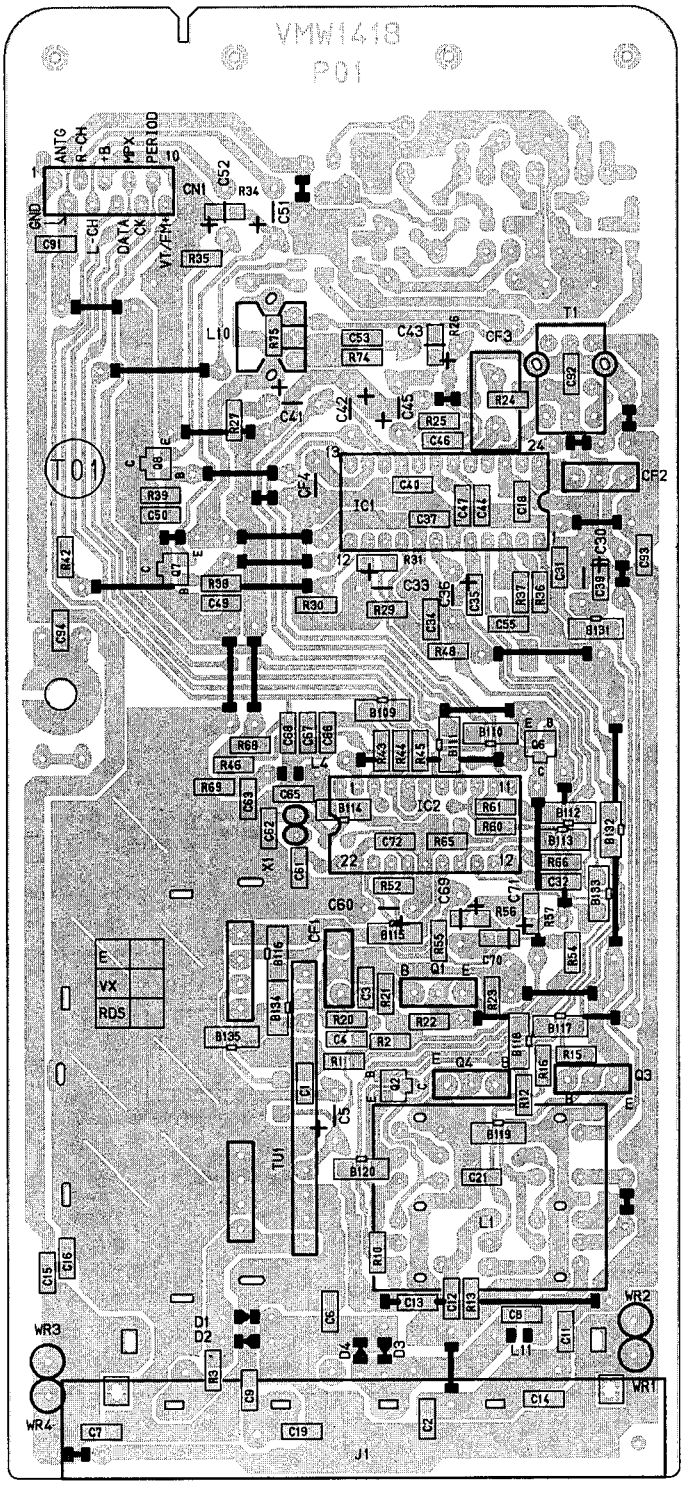

(UX-T150 EE): Block No. 06

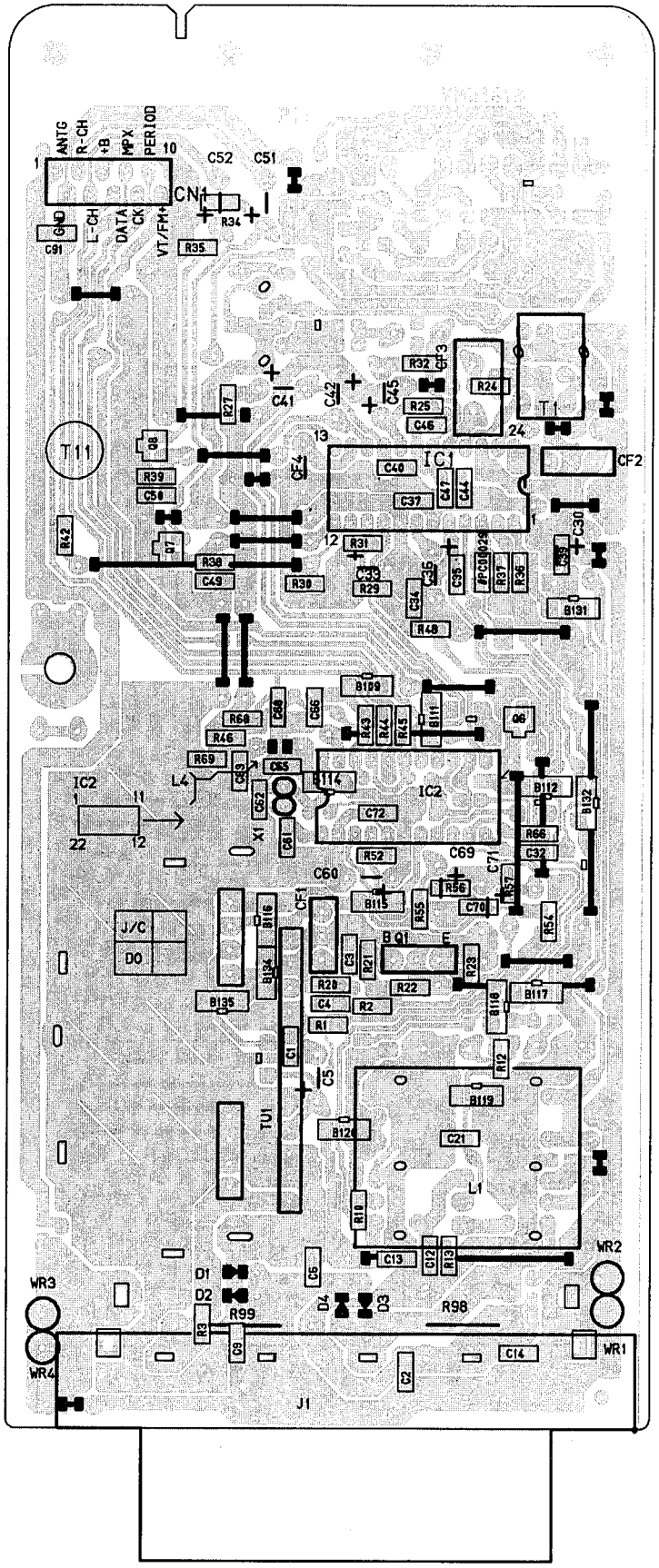

E | F | G | H | I

■ Tuner Board (UX-T150 UB/UF/US/UX/U): Block No. 07

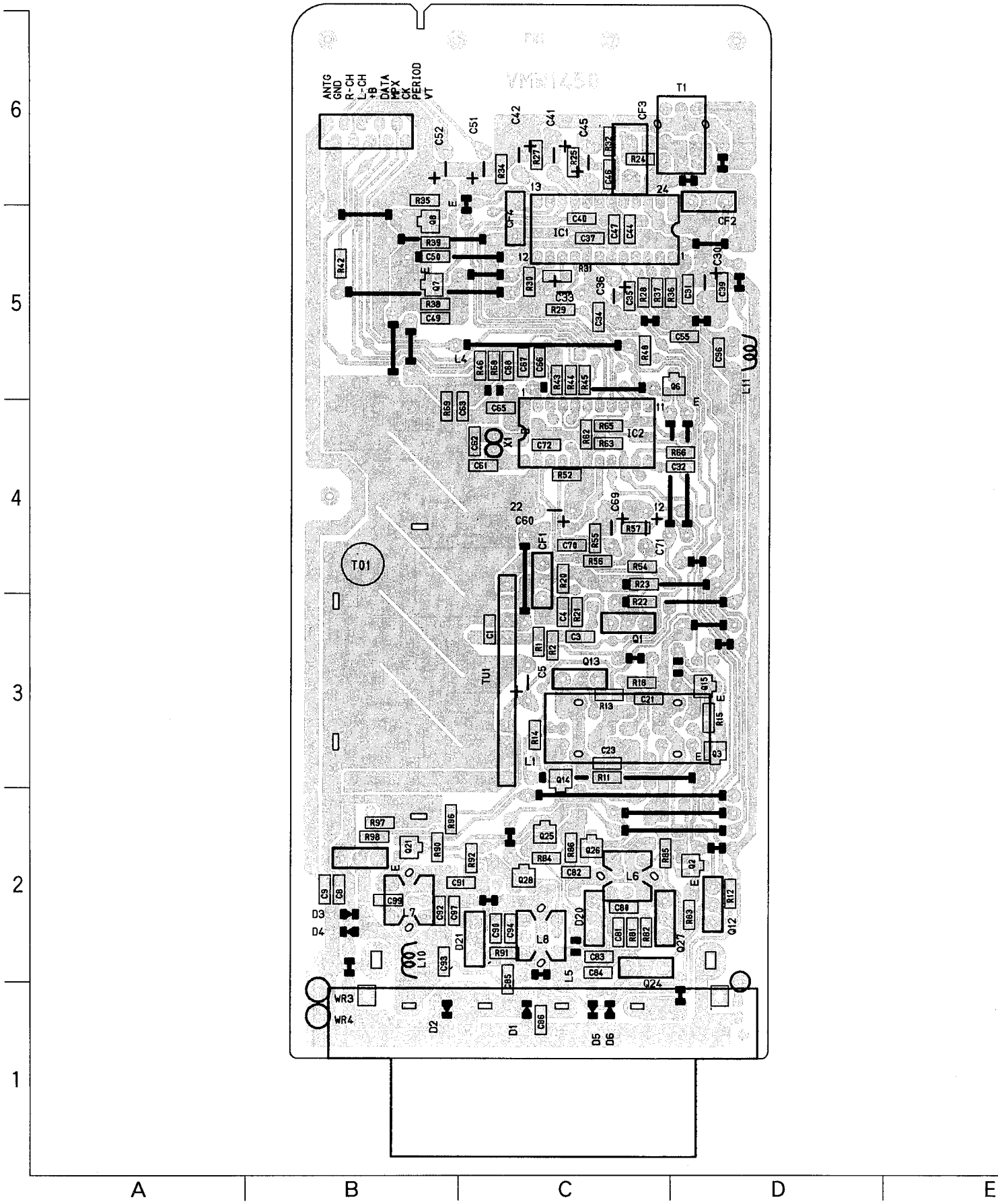

■ CD Servo Control Board: Block No. 08

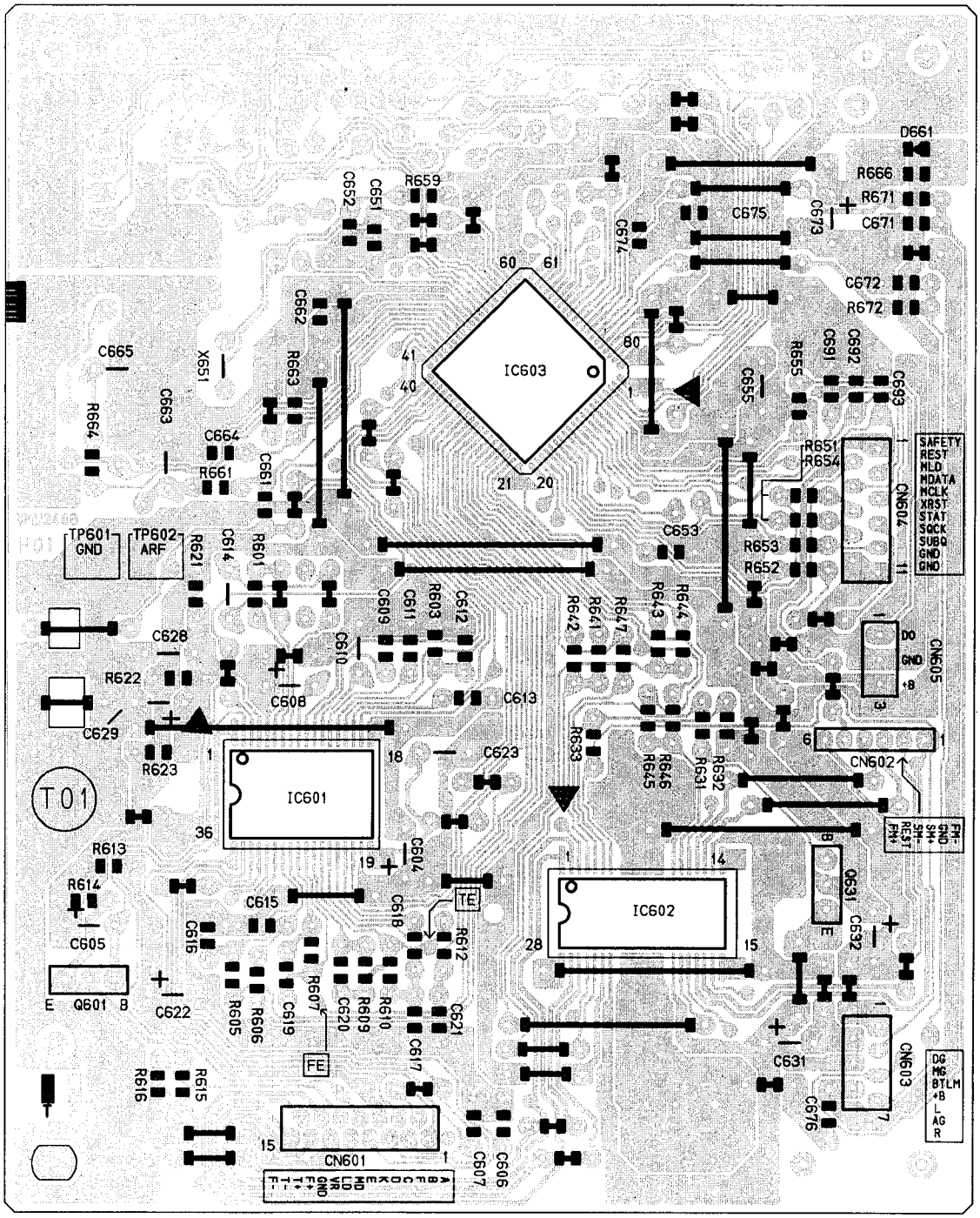

<<Cassette Mechaism>>

■ Reel Pulse Board: Block No. 09

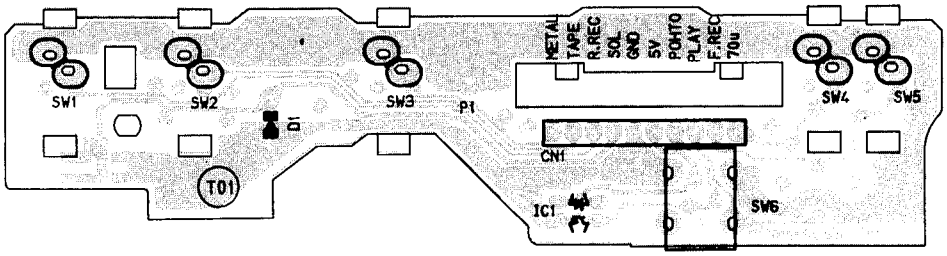

■ Head Amplifier & Mechanism Control Board: Block No. 10

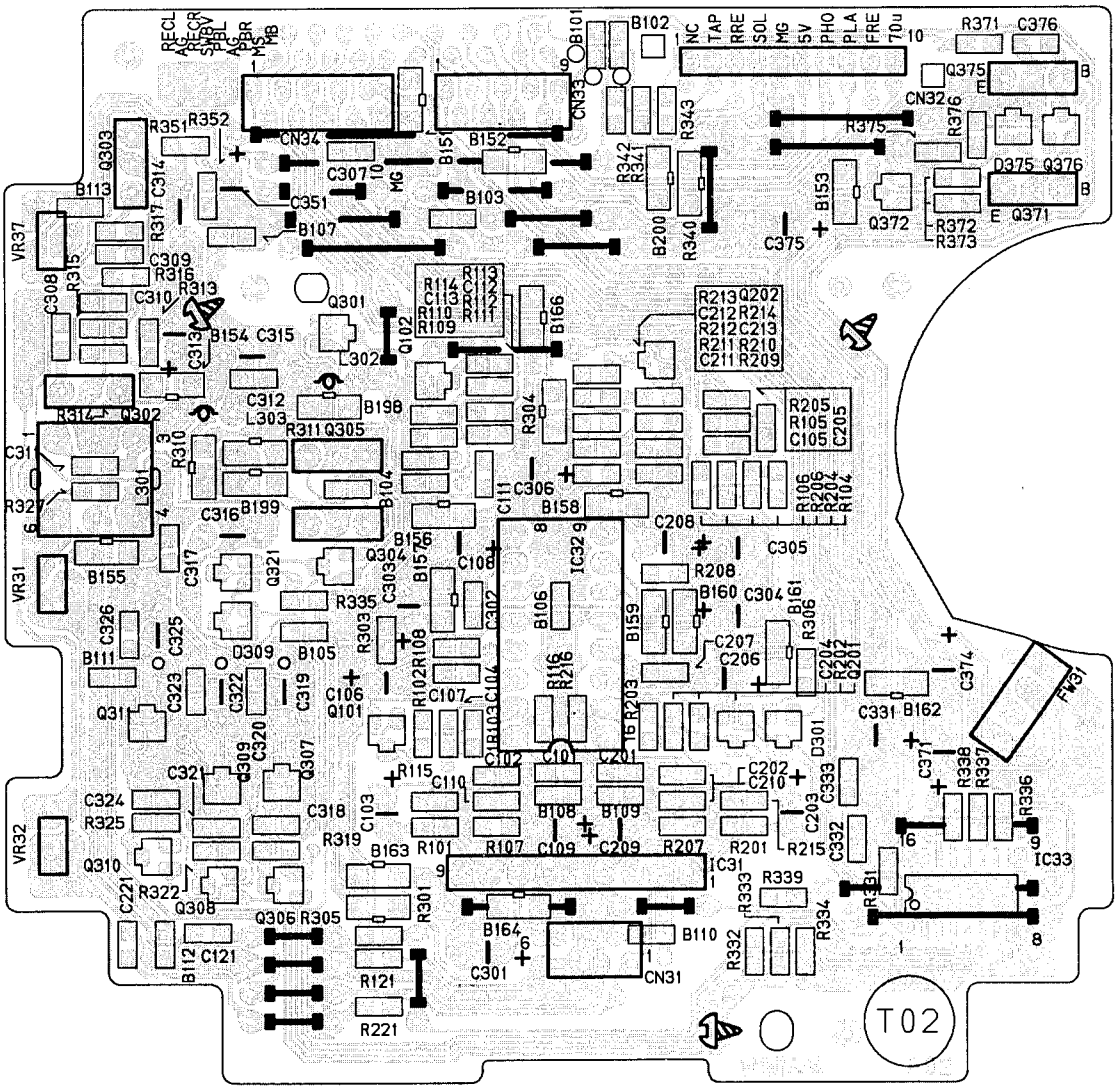

PARTS LIST

[UX-T150/-T151]

* All printed circuit boards and its assemblies are not available as service parts.

Area Suffix (UX-T150)

B ---------- U.K.
E ------ Continental Europe
EE --------- Eastern Europe
EN -------- Northern Europe
UB ---------- Hong Kong
UF ---------- China
US ---------- Singapore
UX ---------- Saudi Arabia
U ---------- Other Areas

Area Suffix (UX-T151)

B ---------- U.K.
E ------ Continental Europe
EN -------- Northern Europe

- Contents -

Exploded View of Cassette Mechanism and Parts List ---------- 4-2
Exploded View of CD Mechanism Assembly and Parts List ---------- 4-3
Exploded View of General Assembly and Parts List ---------- 4-4
Electrical Parts List ---------- 4-8
Packing Materials and Accessories List ---------- 4-26

Exploded View of Cassette Mechanism and Parts List

Blocl No. M 2 M M

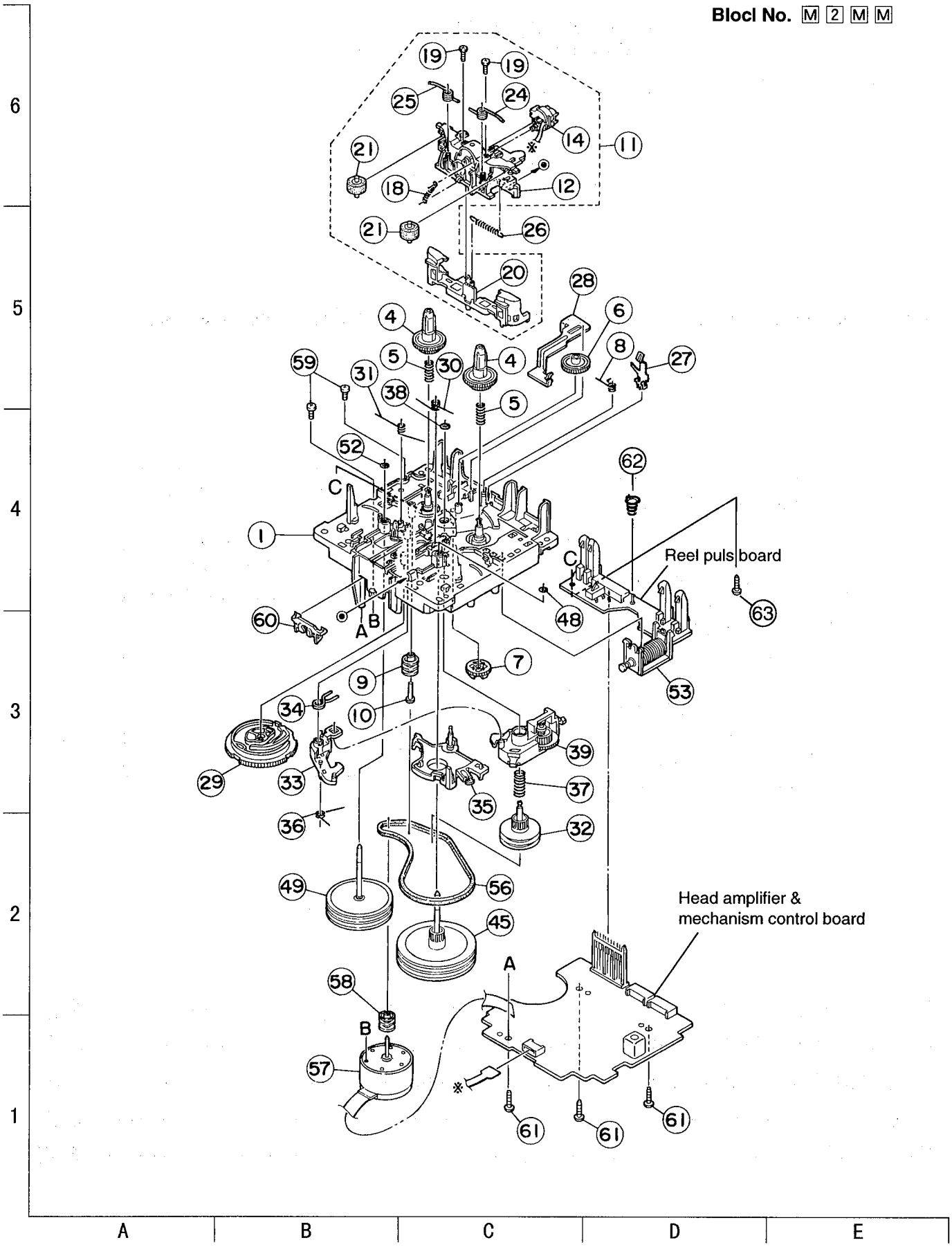

■ Cassette Mechanism Parts List

BLOCK NO. M2MM

⚠	REF.	PARTS NO.	PARTS NAME	REMARKS	QTY	SUFFIX	CLR
	1	VKS1165-00C	CHASSIS B. ASSY		1		
	4	VKS2274-002	REEL GEAR		2		
	5	VKW5286-002	B.T. SPRING		2		
	6	VKS5559-001	PLAY IDLE GEAR		1		
	7	VKS5597-00AKP	FR GEAR ASS'Y		1		
	8	VKW5296-001	EARTH SPRING		1		
	9	VKR4749-002	IDLE PULLEY		1		
	10	VKH5786-002	SHAFT		1		
	11	VKS2275-00C	HEAD MOUNT ASSY		1		
	12	VKS1167-001KP	HEAD MOUNT BASE		1		
	14	VGH0425-544	R/P&E HEAD	VKS2275-00B	1		
	18	VKW5302-001	HEAD SPRING		1		
	19	VKZ4730-001	SPECIAL SCREW		2		
	20	VKS2277-005	DIRECTION LEVER		1		
	21	VKP4233-00A	PINCH ROL. ASSY		2		
	24	VKW5299-001	PIN.ROL.SP.(R)		1		
	25	VKW5300-001	PIN.ROL.SP.(L)		1		
	26	VKW5285-001	RETURN SPRING		1		
	27	VKY3149-001	CASSETTE SP.		1		
	28	VKM3906-002	PLAY SW.LEVER		1		
	29	VKS1166-003KP	CONTROL CAM		1		
	30	VKW5279-001	HEAD BASE SP(R)		1		
	31	VKW5280-001	HEAD BASE SP(L)		1		
	32	VKS5603-00C	MAIN PULLEY ASY		1		
	33	VKS3785-001MM	FR ARM		1		
	34	VKW5284-002	SWING SPRING		1		
	35	VKS2278-001	TRIGGER ARM		1		
	36	VKW5301-001	FR SPRING		1		
	37	VKW5266-001	ELEVATOR SPRING		1		
	38	WDL214025	WASHER		1		
	39	VKS3786-00EKP	CLUTCH ASSY		1		
	45	VKF3205-00B	F.WHEEL ASSY(R)		1		
	48	WDL183425	SLIT WASHER		1		
	49	VKF3207-00B	F.WHEEL ASSY(L)		1		
	52	WDL173525-6	SLIT WASHER		1		
	53	VKZ3174-00AKP	DC SOLENOID		1		
	56	VKB3000-181	CAPSTAN BELT		1		
	57	MSI-5U2LWA	D.C.MOTOR ASS'Y		1		
	58	VKR4761-001	MOTOR PULLEY		1		
	59	SPSP2604Z	SCREW		2		
	60	VKS5577-001	FPC HOLDER		1		
	61	SBSF2608Z	T.SCREW	FOR P.W.B.	3		
	62	LV40450-001AKP	CONNECT SP.		1		
	63	SBSF2006Z	SCREW		1		

Exploded View of CD Mechanism Ass'y and Parts List

■ Grease Point

Block No. M 3 M M

No. EXL-M6

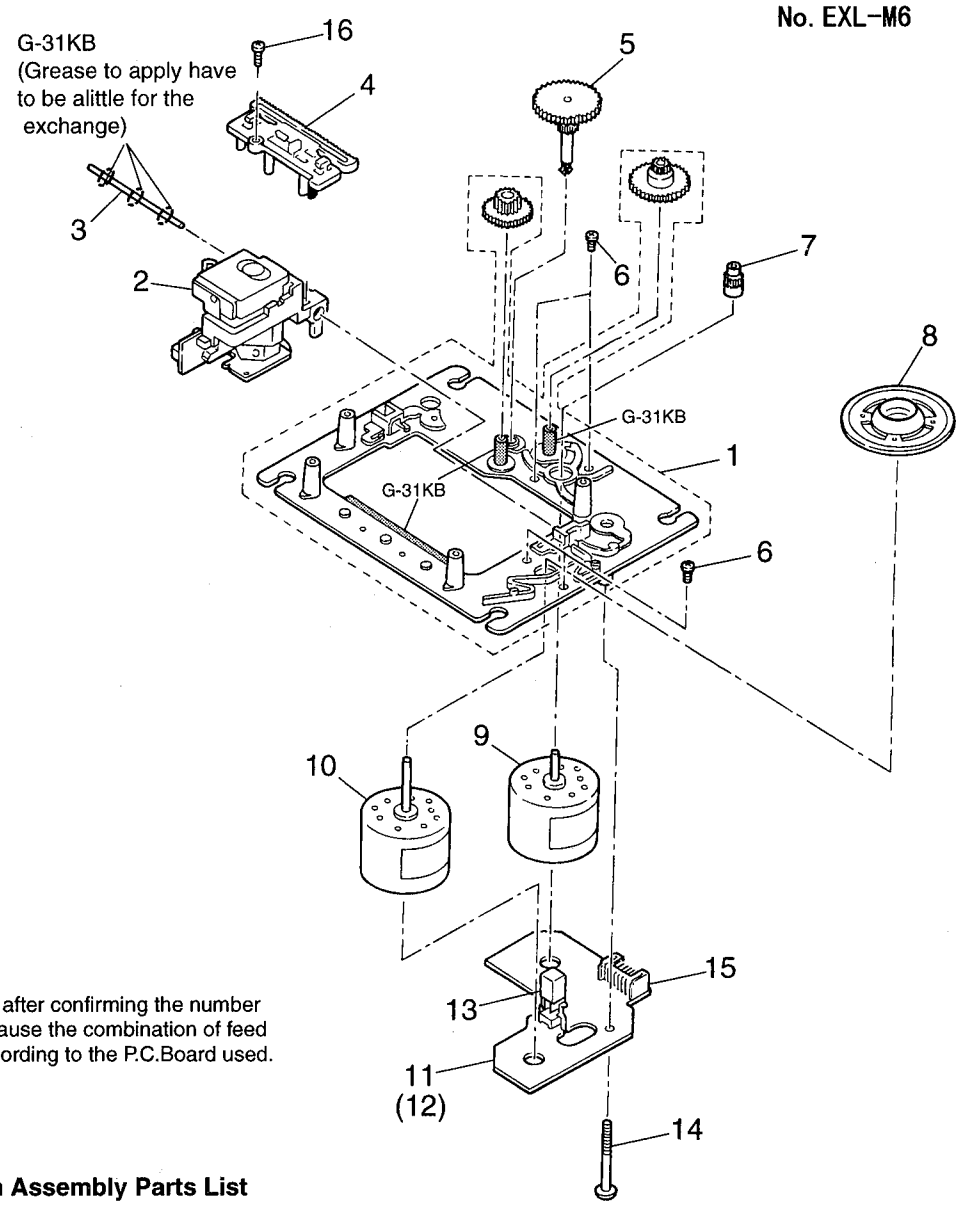

NOTE
Please order moutor after confirming the number of the P.C.Board because the combination of feed motor is different according to the P.C.Board used.

■CD Mechanism Assembly Parts List

⚠	Item	Parts Number	Parts Name	Q'ty	Description	Area
	1	EPB-002PK	MECHA. BASE ASSY	1		
	2	OPTIMA-150S	OPTICAL PICK UP	1		
	3	E407782-001	CD SHAFT	1		
	4	E307746-001	CD RACK	1		
	5	EPB-003A	MECHA GEAR	1		
	6	SDSP2003N	SCREW	4		
	7	E406750-001	PINION GEAR	1		
	8	EPB309173A	TURN TABLE	1		
	9	E406784-001	FEED MOTOR	1	Use the No.11 P.C.Board	
		MDN-4RA3ETA-1	FEED MOTOR	1	Use the No.12 P.C.Board	
	10	E406783-001	SPINDLE MOTOR	1		
	11	EMW10190-001(S)	P.C.BOARD	1		
	12	EMW10190-221(S)	P.C.BOARD	1		
	13	ESB1100-005	LEAF SWITCH	1		
	14	E75832-001	SCREW	1		
	15	EMV5109-006B	CONN. TERMINAL	1		
	16	SDSF2006Z	SCREW	1		

Exploded View of General Assembly and Parts List

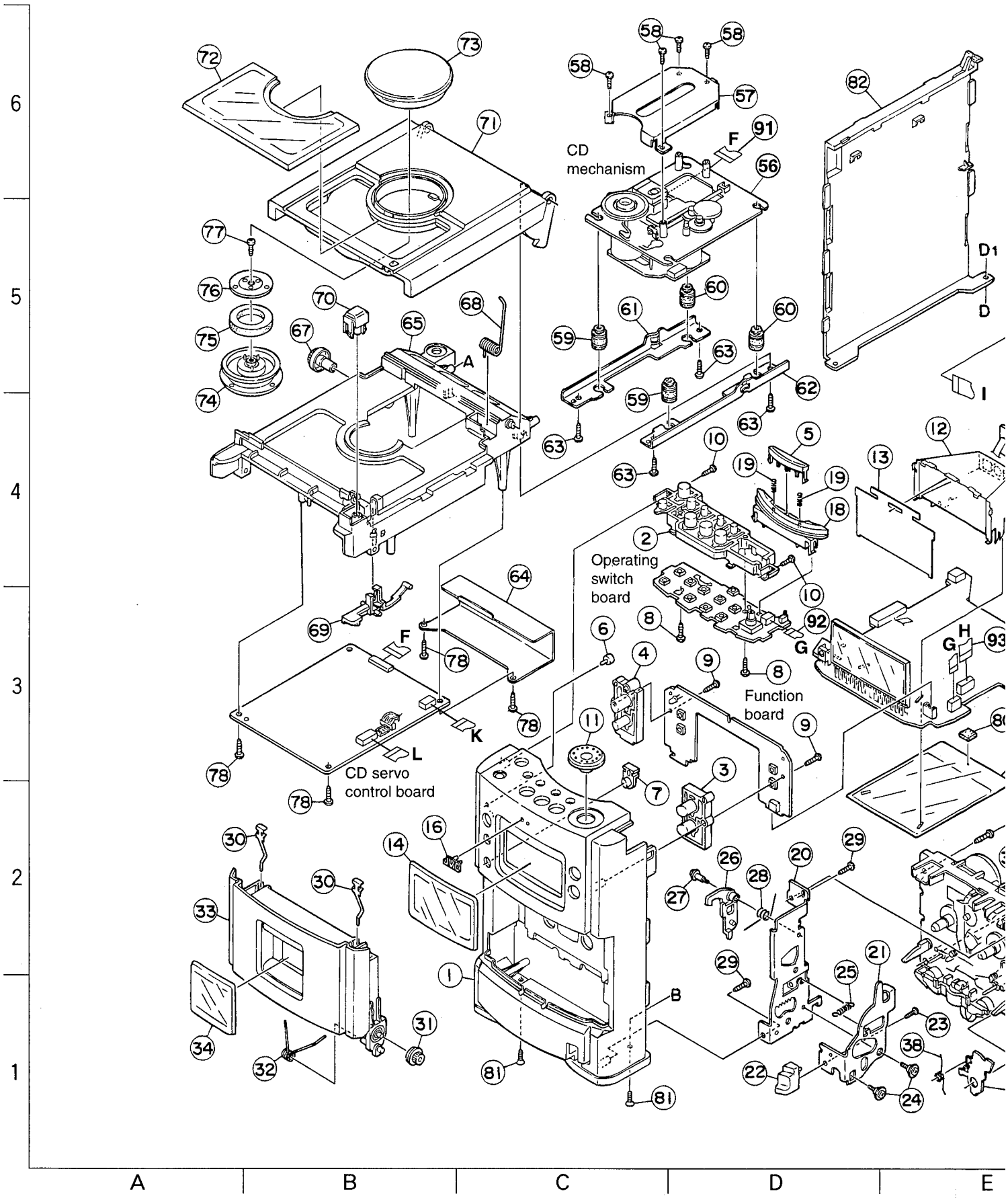

Block No. M 1 M M

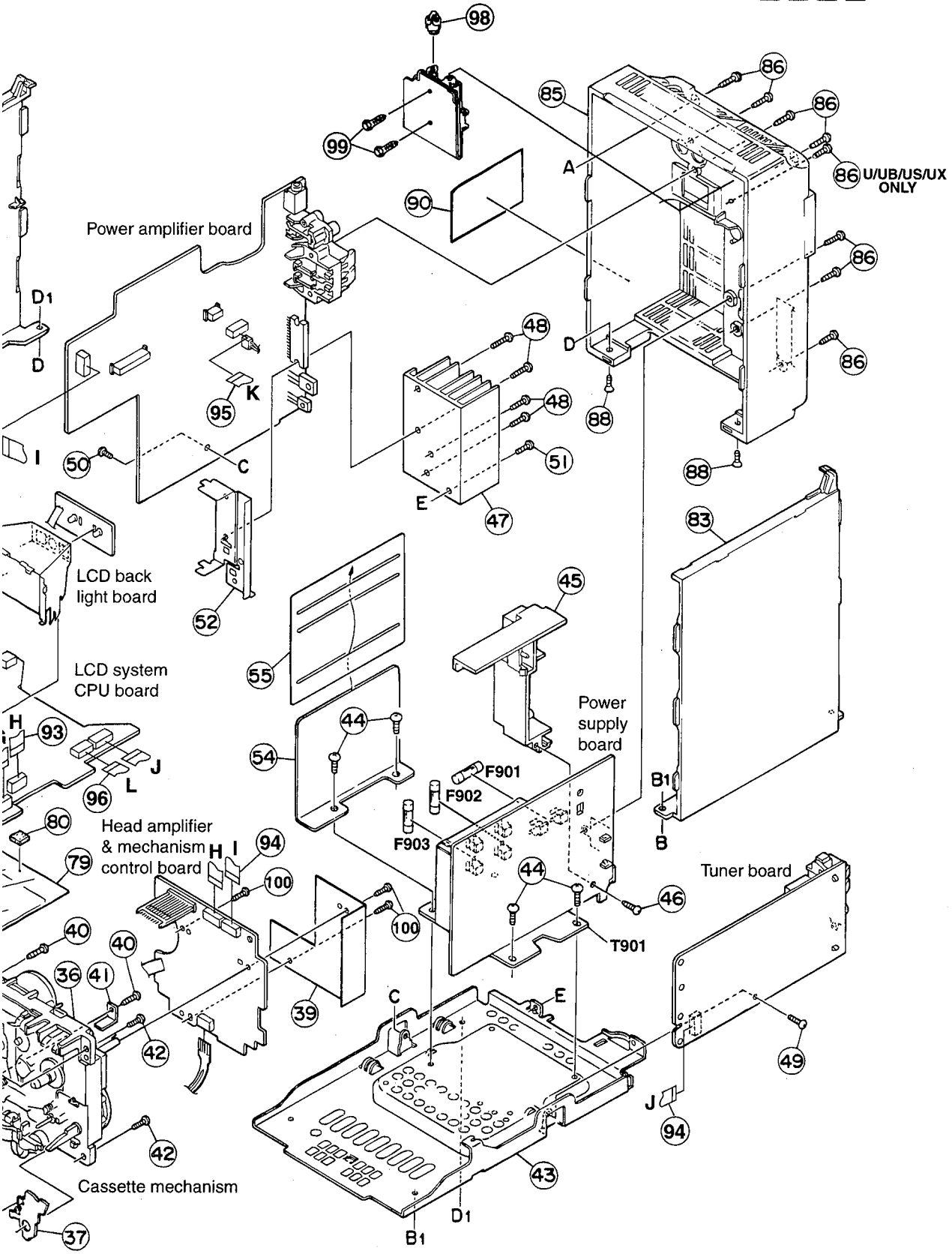

E	F	G	H	I

■ General Assembly Parts List

BLOCK NO. M1MM

⚠	REF.	PARTS NO.	PARTS NAME	REMARKS	QTY	SUFFIX	CLR
	1	VJG1473-011	FRONT PANEL	UX-T151	1		
		VJG1473-017	FRONT PANEL	UX-T150	1		
	2	VXP3867-004	PUSH BUTTON(A)	UX-T151	1		
		VXP3867-003	PUSH BUTTON(A)	UX-T150	1		
	3	VXP5352-003	PUSH BUTTON(B)	UX-T150	1		
		VXP5352-004	PUSH BUTTON(B)	UX-T151	1		
	4	VXP5353-004	PUSH BUTTON(C)	UX-T151	1		
		VXP5353-003	PUSH BUTTON(C)	UX-T150	1		
	5	VXP5358-003	SNOOZE BUTTON	UX-T150	1		
		VXP5358-005	SNOOZE BUTTON	UX-T151	1		
	6	VJK4493-001SC	LENS(STANDBY)		1		
	7	VJK4504-001	REMOCON LENS		1		
	8	SBSF3008Z	SCREW	BUTTON+PWB	2		
	9	SBSF2608Z	T.SCREW	FOR F.P+PWB	2		
	10	SBSF2608Z	T.SCREW	FOR F.P+BUTTON	2		
	11	VXL4453-004	MULTI JOG DIAL	UX-T151	1		
		VXL4453-003	MULTI JOG DIAL	UX-T150	1		
	12	VYH3982-001	LAMP CASE		1		
	13	VYTT704-001	LCD FILTER	FOR LCD	1		
	14	VJT4241-004	LCD LENS	UX-T151	1		
		VJT4241-003	LCD LENS	UX-T150	1		
	16	E406971-221	JVC MARK		1		
	18	VYH8160-004	BUTTON COVER	UX-T151	1		
		VYH8160-003	BUTTON COVER	UX-T150	1		
	19	VKW5306-001	COMP.SPRING		2		
	20	VYH3983-001	DOOR HOLDER		1		
	21	VYH8149-001	EJECT LEVER		1		
	22	VXQ4125-003	EJECT KNOB	UX-T150	1		
		VXQ4125-004	EJECT KNOB	UX-T151	1		
	23	SBSF2608Z	T.SCREW	FOR E.LVR+E.KNO	1		
	24	VKZ4323-002	SCREW	D.HOLDER+E.LEVE	2		
	25	VKW3002-274	TENSION SPRING	FOF E.LEVER	1		
	26	VYH7347-001	EJECT ARM		1		
	27	VKZ4341-001	SPECIAL SCREW	FOR EJECT ARM	1		
	28	VKW4938-001	TORTION SPRING	FOR EJECT ARM	1		
	29	SBSF3008Z	SCREW	F.P+D.HOLDER	2		
	30	VKY4180-001	CASSETTE SPRING		2		
	31	VYH5601-001	GEAR		1		
	32	VKW5295-001	DOOR SPRING		1		
	33	VJT2384-006	CASSETTE DOOR	UX-T150	1		
		VJT2384-007	CASSETTE DOOR	UX-T151	1		
	34	VJT4242-004	DOOR LENS	UX-T151	1		
		VJT4242-003	DOOR LENS	UX-T150	1		
	36	----------	CASSETTE MECHA		1		
	37	VKL7850-203	EJECT SAFTY(R)		1		
	38	VKW5258-002	TORSION SPRING		1		
	39	VMA4723-001	SHIELD		1		
	40	SBSF3010Z	SCREW	F.PANEL+MECHA	2		
	41	VYH8183-001	BRACKET	FOR CASSETTE DO	1		
	42	SBST3008Z	TH TAP SCREW	DOOR HOL+MECHA	2		
	43	VYH1263-001	BOTTOM CHASSIS		1		
	44	SBST4006Z	SCREW	CHASSIS+TRANS	4		
	45	VYH3984-001	JACK HOLDER		1		
	46	SBSF3010Z	SCREW	PWB+JACK HOL	1		
	47	VYH8153-001	RADIATION		1		

BLOCK NO. M1MM

⚠	REF.	PARTS NO.	PARTS NAME	REMARKS	QTY	SUFFIX	CLR
	48	SBST3012Z	SCREW	RADI+IC	4		
	49	SBST3006Z	TH TAP SCREW	TUNER PWB+CHASS	1		
	50	SBST3006Z	TH TAP SCREW	MAIN PWB+CHASSI	1		
	51	SBST3006Z	TH TAP SCREW	RADI+CHASSIS	1		
	52	VYH3987-001SC	IC HOLDER		1		
	54	VMA3239-001	SHIELD		1		
	55	VMA4720-001	BARRIER		1		
	56	----------	CD MECHA		1		
	57	VJD5410-005	PICK COVER		1		
	58	SDSF2006M	SCREW	CD MECHA+P.COVE	4		
	59	E75609-001	INSULATOR	BLACK	2		
	60	E75609-002	INSULATOR	GRAY	2		
	61	VYH8089-001SC	CD MECHA HOLDER		1		
	62	VYH8089-002SC	CD MECHA HOLDER		1		
	63	SBSF3010Z	SCREW	CD CASE+M.HOLDE	4		
	64	VMA4692-002SC	SHIELD	FOR CD MECHA WI	1		
	65	VJD1216-001	CD CASE	UX-T150	1		
		VJD1216-006	CD CASE	UX-T151	1		
	67	VYH4769-002	GEAR		1		
	68	VKW5276-001	CD DOOR SPRING		1		
	69	VYH8152-001	LOCK LEVER		1		
	70	VXP5354-004	CD EJECT KNOB	UX-T150	1		
		VXP5354-005	CD EJECT KNOB	UX-T151	1		
	71	VJT2385-005	CD DOOR	UX-T151	1		
		VJT2385-004	CD DOOR	UX-T150	1		
	72	VJT3392-003	CD LENS	UX-T150	1		
		VJT3392-004	CD LENS	UX-T151	1		
	73	VJT4245-004	CD ORNAMENT	UX-T151	1		
		VJT4245-003	CD ORNAMENT	UX-T150	1		
	74	VYH3726-002SS	CLAMPER		1		
	75	VYH7313-003	MAGNET		1		
	76	VYH7677-201	YOKE		1		
	77	SDSF2606Z	SCREW	FOR CLAMPER	1		
	78	SBSF3010Z	SCREW	CD PWB+CD CASE	4		
	79	VMA4721-002	SHIELD		1		
	80	PU59915-105	SPACER	FOR SHIELD	1		
	81	SSST3008Z	SCREW	CHASSIS+F.PANEL	2		
	82	VJD2488-007	SIDE PANEL(L)	UX-T151	1		
		VJD2488-006	SIDE PANEL(L)	UX-T150	1		
	83	VJD2489-006	SIDE PANEL(R)	UX-T150	1		
		VJD2489-007	SIDE PANEL(R)	UX-T151	1		
	85	VJG1477-021	REAR PANEL	UX-T150	1	B,E,EE,EN	
		VJG1477-023	REAR PANEL	UX-T151	1		
		VJG1477-024	REAR PANEL	UX-T150	1	UF	
		VJG1477-022	REAR PANEL	UX-T150	1	U,UB,US,UX	
	86	SBSF3010Z	SCREW		7	B,E,EE,EN	
		SBSF3010Z	SCREW		8	U,UB,US,UX	
		SBSF3010Z	SCREW		7	UF	
	88	SSST3008Z	SCREW	FOR R.P+CHASSIS	2		
	90	LV30395-002A	NAME PLATE	UX-T150	1	U,UB,US	
		LV30395-005A	NAME PLATE	UX-T150	1	U,UX	
		LV30395-001A	NAME PLATE	UX-T150	1	B,E,EN	
		LV30395-003A	NAME PLATE	UX-T150	1	EE	
		LV30395-006A	NAME PLATE	UX-T150	1	UF	

BLOCK NO. M1MM

⚠	REF.	PARTS NO.	PARTS NAME	REMARKS	QTY	SUFFIX	CLR
		LV30397-001A	NAME PLATE	UX-T151	1		
	91	VWF1015-07TTA	FFC CABLE	CD - PICK	1		
	92	VWF1205-08TTB	FFC	KEY - MICOM	1		
	93	VWF1209-14TTB	TAF CARD	SLC - MICOM	1		
	94	VWF1210-20TTB	CARD WIRE	SLC - MAIN	1		
		VWF1210-20TTB	CARD WIRE	MICOM - TUNER	1		
	95	VWF1207-16TTB	CARD WIRE	MAIN - CD	1		
	96	VWF1211-06TTBX	CARD WIRE	MICOM - CD	1		
	98	VXL4439-001	VOL.KNOB		1	U,UB,US,UX	
	99	SBSF3010Z	SCREW		2	U,UB,US,UX	
	100	SBSF2608Z	T.SCREW		3		
⚠	F 901	QMF51E2-1R0J1	FUSE		1	U,UB,US,UX	
		QMF51E2-R40SBS	FUSE		1	B,E,EE,EN	
		QMF51E2-R40SBS	FUSE		1	UF	
⚠	F 902	QMF51E2-6R3J1	FUSE		1	U,UB,US,UX	
⚠	F 903	QMF51E2-5R0	FUSE		1		
	T 901	VTP66J2-12L	POWER TRANS		1	B,E,EE,EN	
		VTP66J2-12L	POWER TRANS		1	UF	
⚠		VTP66G2-12L	POWER TRANS		1	U,UB,US,UX	

Electrical Parts List

■ Main Board (B/E/EE/EN)

BLOCK NO. 01

⚠	REF.	PARTS NO.	PARTS NAME	REMARKS	SUFFIX
⚠	C 901	QFLC1HJ-104ZM	M CAPACITOR	.10MF 5% 50V	
⚠	C 902	QFLC1HJ-104ZM	M CAPACITOR	.10MF 5% 50V	
⚠	C 903	QFLC1HJ-104ZM	M CAPACITOR	.10MF 5% 50V	
⚠	C 904	QFLC1HJ-104ZM	M CAPACITOR	.10MF 5% 50V	
	CN301	VMC0314-S20	CONNECTOR		
	CN302	QGB1214J1-06S	CONNECTOR		
	CN303	VMC0163-010	CONNECTOR		
	CN304	QGF1205C1-07	CONNECTOR		
	CN801	VMC0289-S03	CONNECTOR		
	CN802	VMC0163-R05	CONNECTOR		
	CN901	VMC0040-002	CONNECTOR		
	C1000	QCXB1CM-332Y	C CAPACITOR	3300PF 20% 16V	
	C1001	QCBB1HK-331Y	C CAPACITOR	330PF 10% 50V	
	C1002	QCC31EM-104ZV	C CAPACITOR	.10MF 20% 25V	
	C1003	QCC31EM-104ZV	C CAPACITOR	.10MF 20% 25V	
	C1006	QTE1C03-106Z	E CAPACITOR		
	C1007	QCBB1HK-221Y	C CAPACITOR	220PF 10% 50V	
	C1010	QCBB1HK-221Y	C CAPACITOR	220PF 10% 50V	
	C1021	QFN41HJ-823	M CAPACITOR	.082MF 5% 50V	
	C1022	QFN41HJ-823	M CAPACITOR	.082MF 5% 50V	
	C1025	QTE1A03-226Z	E CAPACITOR		
	C1026	QFV71HJ-334ZM	M.CAPACITOR	.33MF 5% 50V	
	C1041	QCGB1HK-102	C CAPACITOR	1000PF 10% 50V	
	C1050	QCS11HJ-300	C CAPACITOR	30PF 5% 50V	
	C1051	QCS11HJ-100	C CAPACITOR	10PF 5% 50V	
	C1053	QTE1C03-106Z	E CAPACITOR		
	C1054	QFN31HJ-392Z	M.CAPACITOR	3900PF 5% 50V	
	C1055	QETC1EM-475ZM	E CAPACITOR	4.7MF 20% 25V	
	C1056	QTE1C03-106Z	E CAPACITOR		
	C1070	QETC1EM-475ZM	E CAPACITOR	4.7MF 20% 25V	
	C1082	QFLB1HJ-563	TF CAPACITOR	.056MF 5% 50V	
	C1083	QFLB1HJ-563	TF CAPACITOR	.056MF 5% 50V	
	C1084	QFN41HJ-472	M CAPACITOR	4700PF 5% 50V	
	C2000	QCXB1CM-332Y	C CAPACITOR	3300PF 20% 16V	
	C2001	QCBB1HK-331Y	C CAPACITOR	330PF 10% 50V	
	C2002	QCC31EM-104ZV	C CAPACITOR	.10MF 20% 25V	
	C2003	QCC31EM-104ZV	C CAPACITOR	.10MF 20% 25V	
	C2006	QTE1C03-106Z	E CAPACITOR		
	C2007	QCBB1HK-221Y	C CAPACITOR	220PF 10% 50V	
	C2010	QCBB1HK-221Y	C CAPACITOR	220PF 10% 50V	
	C2021	QFN41HJ-823	M CAPACITOR	.082MF 5% 50V	
	C2022	QFN41HJ-823	M CAPACITOR	.082MF 5% 50V	
	C2025	QTE1A03-226Z	E CAPACITOR		
	C2026	QFV71HJ-334ZM	M.CAPACITOR	.33MF 5% 50V	
	C2041	QCGB1HK-102	C CAPACITOR	1000PF 10% 50V	
	C2050	QCS11HJ-300	C CAPACITOR	30PF 5% 50V	
	C2051	QCS11HJ-100	C CAPACITOR	10PF 5% 50V	
	C2053	QTE1C03-106Z	E CAPACITOR		
	C2054	QFN31HJ-392Z	M.CAPACITOR	3900PF 5% 50V	
	C2055	QETC1EM-475ZM	E CAPACITOR	4.7MF 20% 25V	
	C2056	QTE1C03-106Z	E CAPACITOR		
	C2070	QETC1EM-475ZM	E CAPACITOR	4.7MF 20% 25V	
	C2082	QFLB1HJ-563	TF CAPACITOR	.056MF 5% 50V	
	C2083	QFLB1HJ-563	TF CAPACITOR	.056MF 5% 50V	
	C2084	QFN41HJ-472	M CAPACITOR	4700PF 5% 50V	

BLOCK NO. 01

⚠	REF.	PARTS NO.	PARTS NAME	REMARKS	SUFFIX
	C3001	QETM1EM-688	E CAPACITOR	6800MF 20% 25V	
	C3002	QFLC1HJ-104ZM	M CAPACITOR	.10MF 5% 50V	
	C3003	QETC1CM-107ZN	E CAPACITOR	100MF 20% 16V	
	C3004	QETC1AM-337ZN	E CAPACITOR	330MF 20% 10V	
	C3005	QETC1AM-336ZN	E CAPACITOR	33MF 20% 10V	
	C3006	QETC1HM-225ZM	E CAPACITOR	2.2MF 20% 50V	
	C3010	QETC1HM-684ZN	E.CAPACITOR	.68MF 20% 50V	
	C3011	QCVB1CN-103Y	C CAPACITOR	.010MF 30% 16V	
	C3021	QETC1CM-476ZM	E CAPACITOR	47MF 20% 16V	
	C3022	QETC1AM-476ZM	E CAPACITOR	47MF 20% 10V	
	C3031	QETC1HM-105Z	E CAPACITOR	1.0MF 20% 50V	
	C3032	QETC1HM-105Z	E CAPACITOR	1.0MF 20% 50V	
	C3033	QFLB1HJ-563	TF CAPACITOR	.056MF 5% 50V	
	C3034	QFLB1HJ-563	TF CAPACITOR	.056MF 5% 50V	
	C3035	QETC1HM-105Z	E CAPACITOR	1.0MF 20% 50V	
	C3036	QETC1CM-106ZM	E CAPACITOR	10MF 20% 16V	
	C3037	QETC1CM-106ZM	E CAPACITOR	10MF 20% 16V	
	C3038	QCBB1HK-151Y	C CAPACITOR	150PF 10% 50V	
	C3041	QETC1EM-106ZN	E CAPACITOR	10MF 20% 25V	
	C3051	QETC1CM-476ZM	E CAPACITOR	47MF 20% 16V	
	C3052	QETC1CM-476ZM	E CAPACITOR	47MF 20% 16V	
	C3070	QER41HM-105	E CAPACITOR	1.0MF 20% 50V	
	C3081	QETC1CM-227Z	E CAPACITOR	220MF 20% 16V	
	C3083	QETC1HM-474ZN	E CAPACITOR	.47MF 20% 50V	
	C3084	QETC1HM-474ZN	E CAPACITOR	.47MF 20% 50V	
	C3085	QETC1HM-474ZN	E CAPACITOR	.47MF 20% 50V	
	C3086	QETC1EM-106ZN	E CAPACITOR	10MF 20% 25V	
	C3087	QETC1HM-224ZM	E CAPACITOR	.22MF 20% 50V	
	C8011	QCVB1CN-103Y	C CAPACITOR	.010MF 30% 16V	
	C8012	QCVB1CN-103Y	C CAPACITOR	.010MF 30% 16V	
	C9001	QETC1CM-226ZM	E CAPACITOR	22MF 20% 16V	
	C9003	QCVB1CN-103Y	C CAPACITOR	.010MF 30% 16V	
	C9004	QCBB1HK-221Y	C CAPACITOR	220PF 10% 50V	
	C9201	QETC1CM-476ZM	E CAPACITOR	47MF 20% 16V	
	C9202	QCVB1CN-103Y	C CAPACITOR	.010MF 30% 16V	
	C9203	QETC1CM-106ZM	E CAPACITOR	10MF 20% 16V	
	C9301	QETC1AM-107ZN	E CAPACITOR	100MF 20% 10V	
	C9302	QETC1HM-475ZN	E CAPACITOR	4.7MF 20% 50V	
	C9501	QETC1AM-477ZM	E CAPACITOR	470MF 20% 10V	
⚠	D 901	6A10E2	SI DIODE		
⚠	D 902	6A10E2	SI DIODE		
⚠	D 903	6A10E2	SI DIODE		
⚠	D 904	6A10E2	SI DIODE		
⚠	D 905	6A10E2	SI DIODE		
	D3021	MTZ4.3JB	ZENER DIODE		
	D3031	1N4148M-T2	SI DIODE		
	D3032	1N4148M-T2	SI DIODE		
	D3033	1N4148M-T2	SI DIODE		
	D3034	1N4148M-T2	SI DIODE		
	D3070	MTZ6.8JB	DIODE		
	D8101	L-34ID-T12	LED	STANDBY LED RED	
	D9001	1SS133	SI DIODE		
	D9002	MTZ8.2JC	ZENER DIODE		
	D9003	MTZ10JAT-77	ZENER DIODE		
	D9201	MTZ4.3JB	ZENER DIODE		

BLOCK NO. 01

⚠	REF.	PARTS NO.	PARTS NAME	REMARKS	SUFFIX
	D9301	MTZ3.9JB	Z DIODE		
	D9302	1SS133	SI DIODE		
	D9303	1N4148M-T2	SI DIODE		
	D9501	1SS133	SI DIODE		
⚠	IC 31	LA4705NA	IC		
	IC 32	BA15218N	IC		
	IC 35	BA15218N	IC		
	IC 38	BH3852S	IC		
⚠	J 901	QNC0001-001	AC SOCKET 8TYPE		
⚠	J 902	QMA431B-V01	FILM CAPACITOR		
	JS801	QSW0547-001	ROTARY ENCODER		
	J3001	QNN0090-001	PIN JACK	KUNMING HSP-242	
	J3002	QNB0035-001	SPK TERMINAL	KUNMIG HSP-324V	
	J3003	QNS0072-001	HEADPHONE JACK		
	K9401	VQZ0107-002	INDUCTOR		
	L 901	VQZ0113-001	INDUCTOR		
	L1001	VQP0018-470	INDUCTOR		
	L1002	VQZ0048-007	INDUCTOR		
	L1003	VQZ0104-003	INDUCTOR		
	L2001	VQP0018-470	INDUCTOR		
	L2002	VQZ0048-007	INDUCTOR		
	L2003	VQZ0104-003	INDUCTOR		
	L3001	VQP0018-470	INDUCTOR		
	L3070	VQZ0048-007	INDUCTOR		
	Q1010	2SD2144S(VW)	TRANSISTOR		
	Q1031	KTC3199(GL)-T	TRANSISTOR		
	Q1041	2SC2001(L,K)	TRANSISTOR		
	Q1070	KTC3199(GL)-T	TRANSISTOR		
	Q2010	2SD2144S(VW)	TRANSISTOR		
	Q2031	KTC3199(GL)-T	TRANSISTOR		
	Q2041	2SC2001(L,K)	TRANSISTOR		
	Q2070	KTC3199(GL)-T	TRANSISTOR		
	Q3010	KTC3199(GL)-T	TRANSISTOR		
	Q3041	KRA101M-T	TRANSISTOR		
	Q3070	KRA101M-T	TRANSISTOR		
⚠	Q9001	2SB1565(E,F)	TRANSISTOR		
	Q9002	KTC3199(GL)-T	TRANSISTOR		
	Q9003	KTA1267(YG)-T	TRANSISTOR		
	Q9004	KRC114M-T	TRANSISTOR		
	Q9005	UN4110	TRANSISTOR		
	Q9006	KTC3199(GL)-T	TRANSISTOR		
	Q9007	KTC3199(GL)-T	TRANSISTOR		
⚠	Q9201	2SA1359/OY/	TRANSISTOR		
	Q9202	KTC3199(GL)-T	TRANSISTOR		
	Q9301	KTA1267(YG)-T	TRANSISTOR		
	Q9302	KTC3199(GL)-T	TRANSISTOR		
	Q9501	2SC2001(L,K)	TRANSISTOR		
	R1001	QRD161J-2R2	C RESISTOR	2.2 5% 1/4W	
	R1002	QRD161J-2R2	C RESISTOR	2.2 5% 1/4W	
	R1003	QRD161J-151	C RESISTOR	150 5% 1/4W	
	R1004	QRD161J-471	C RESISTOR	470 5% 1/4W	
	R1010	QRD161J-102	C RESISTOR	1.0K 5% 1/4W	
	R1011	QRD161J-224	C RESISTOR	220K 5% 1/4W	
	R1012	QRD161J-623	C RESISTOR	62K 5% 1/4W	
	R1013	QRD161J-153	C RESISTOR	15K 5% 1/4W	

BLOCK NO. 01

⚠	REF.	PARTS NO.	PARTS NAME	REMARKS	SUFFIX
	R1014	QRD161J-272	C RESISTOR	2.7K 5% 1/4W	
	R1015	QRD161J-153	C RESISTOR	15K 5% 1/4W	
	R1022	QRD161J-224	C RESISTOR	220K 5% 1/4W	
	R1023	QRD161J-182	C RESISTOR	1.8K 5% 1/4W	
	R1024	QRD161J-202	C RESISTOR	2.0K 5% 1/4W	
	R1026	QRD161J-153	C RESISTOR	15K 5% 1/4W	
	R1027	QRD161J-103	C RESISTOR	10K 5% 1/4W	
	R1028	QRD161J-472	C RESISTOR	4.7K 5% 1/4W	
	R1029	QRD161J-472	C RESISTOR	4.7K 5% 1/4W	
	R1031	QRD161J-223	C RESISTOR	22K 5% 1/4W	
	R1032	QRD161J-223	C RESISTOR	22K 5% 1/4W	
	R1033	QRD161J-103	C RESISTOR	10K 5% 1/4W	
	R1041	QRD161J-472	C RESISTOR	4.7K 5% 1/4W	
	R1051	QRD161J-154	C RESISTOR	150K 5% 1/4W	
	R1052	QRD161J-102	C RESISTOR	1.0K 5% 1/4W	
	R1054	QRD161J-472	C RESISTOR	4.7K 5% 1/4W	
	R1055	QRD167J-332	C RESISTOR	3.3K 5% 1/4W	
	R1056	QRD161J-103	C RESISTOR	10K 5% 1/4W	
	R1057	QRD161J-124	C RESISTOR	120K 5% 1/4W	
	R1070	QRE141J-183Y	C RESISTOR	18K 5% 1/4W	
	R1071	QRD161J-153	C RESISTOR	15K 5% 1/4W	
	R1072	QRD161J-272	C RESISTOR	2.7K 5% 1/4W	
	R1073	QRD161J-102	C RESISTOR	1.0K 5% 1/4W	
	R1074	QRD161J-152	C RESISTOR	1.5K 5% 1/4W	
	R1082	QRD161J-302	C RESISTOR	3.0K 5% 1/4W	
	R1083	QRD161J-182	C RESISTOR	1.8K 5% 1/4W	
	R1091	QRD161J-333	C RESISTOR	33K 5% 1/4W	
	R1093	QRD161J-103	C RESISTOR	10K 5% 1/4W	
	R2001	QRD161J-2R2	C RESISTOR	2.2 5% 1/4W	
	R2002	QRD161J-2R2	C RESISTOR	2.2 5% 1/4W	
	R2003	QRD161J-151	C RESISTOR	150 5% 1/4W	
	R2004	QRD161J-471	C RESISTOR	470 5% 1/4W	
	R2010	QRD161J-102	C RESISTOR	1.0K 5% 1/4W	
	R2011	QRD161J-224	C RESISTOR	220K 5% 1/4W	
	R2012	QRD161J-623	C RESISTOR	62K 5% 1/4W	
	R2013	QRD161J-153	C RESISTOR	15K 5% 1/4W	
	R2014	QRD161J-272	C RESISTOR	2.7K 5% 1/4W	
	R2015	QRD161J-153	C RESISTOR	15K 5% 1/4W	
	R2022	QRD161J-224	C RESISTOR	220K 5% 1/4W	
	R2023	QRD161J-182	C RESISTOR	1.8K 5% 1/4W	
	R2024	QRD161J-202	C RESISTOR	2.0K 5% 1/4W	
	R2026	QRD161J-153	C RESISTOR	15K 5% 1/4W	
	R2027	QRD161J-103	C RESISTOR	10K 5% 1/4W	
	R2028	QRD161J-472	C RESISTOR	4.7K 5% 1/4W	
	R2029	QRD161J-472	C RESISTOR	4.7K 5% 1/4W	
	R2031	QRD161J-223	C RESISTOR	22K 5% 1/4W	
	R2032	QRD161J-223	C RESISTOR	22K 5% 1/4W	
	R2033	QRD161J-103	C RESISTOR	10K 5% 1/4W	
	R2041	QRD161J-472	C RESISTOR	4.7K 5% 1/4W	
	R2051	QRD161J-154	C RESISTOR	150K 5% 1/4W	
	R2052	QRD161J-102	C RESISTOR	1.0K 5% 1/4W	
	R2054	QRD161J-472	C RESISTOR	4.7K 5% 1/4W	
	R2055	QRD167J-332	C RESISTOR	3.3K 5% 1/4W	
	R2056	QRD161J-103	C RESISTOR	10K 5% 1/4W	
	R2057	QRD161J-124	C RESISTOR	120K 5% 1/4W	

BLOCK NO. 01

⚠	REF.	PARTS NO.	PARTS NAME	REMARKS	SUFFIX
	R2070	QRE141J-183Y	C RESISTOR	18K 5% 1/4W	
	R2071	QRD161J-153	C RESISTOR	15K 5% 1/4W	
	R2072	QRD161J-272	C RESISTOR	2.7K 5% 1/4W	
	R2073	QRD161J-102	C RESISTOR	1.0K 5% 1/4W	
	R2074	QRD161J-152	C RESISTOR	1.5K 5% 1/4W	
	R2082	QRD161J-302	C RESISTOR	3.0K 5% 1/4W	
	R2083	QRD161J-182	C RESISTOR	1.8K 5% 1/4W	
	R2091	QRD161J-333	C RESISTOR	33K 5% 1/4W	
	R2093	QRD161J-103	C RESISTOR	10K 5% 1/4W	
	R3001	QRD161J-103	C RESISTOR	10K 5% 1/4W	
	R3010	QRD161J-103	C RESISTOR	10K 5% 1/4W	
	R3021	QRD161J-101	C RESISTOR	100 5% 1/4W	
	R3022	QRD161J-152	C RESISTOR	1.5K 5% 1/4W	
	R3031	QRD161J-472	C RESISTOR	4.7K 5% 1/4W	
	R3032	QRD161J-472	C RESISTOR	4.7K 5% 1/4W	
	R3033	QRD161J-124	C RESISTOR	120K 5% 1/4W	
	R3034	QRD161J-154	C RESISTOR	150K 5% 1/4W	
	R3035	QRD161J-223	C RESISTOR	22K 5% 1/4W	
	R3036	QRD161J-513	C RESISTOR	51K 5% 1/4W	
	R3051	QRD161J-101	C RESISTOR	100 5% 1/4W	
	R3052	QRD161J-473	C RESISTOR	47K 5% 1/4W	
	R3053	QRD161J-473	C RESISTOR	47K 5% 1/4W	
	R3081	QRD161J-101	C RESISTOR	100 5% 1/4W	
	R3082	QRD161J-124	C RESISTOR	120K 5% 1/4W	
	R3083	QRD161J-154	C RESISTOR	150K 5% 1/4W	
	R3084	QRD161J-124	C RESISTOR	120K 5% 1/4W	
	R8001	QRD161J-102	C RESISTOR	1.0K 5% 1/4W	
	R8002	QRD161J-102	C RESISTOR	1.0K 5% 1/4W	
	R8003	QRD161J-122	C RESISTOR	1.2K 5% 1/4W	
	R8005	QRD161J-153	C RESISTOR	15K 5% 1/4W	EE
	R8011	QRD161J-102	C RESISTOR	1.0K 5% 1/4W	
	R8012	QRD161J-102	C RESISTOR	1.0K 5% 1/4W	
	R8013	QRD161J-122	C RESISTOR	1.2K 5% 1/4W	
	R8014	QRD161J-152	C RESISTOR	1.5K 5% 1/4W	
	R8015	QRD161J-222	C RESISTOR	2.2K 5% 1/4W	
	R8016	QRD161J-272	C RESISTOR	2.7K 5% 1/4W	
	R8017	QRD161J-392	C RESISTOR	3.9K 5% 1/4W	
	R8018	QRD167J-562	C RESISTOR	5.6K 5% 1/4W	
	R8019	QRD161J-103	C RESISTOR	10K 5% 1/4W	
	R8101	QRD161J-271	C RESISTOR	270 5% 1/4W	
	R9001	QRD161J-1R0	C RESISTOR	1.0 5% 1/4W	
	R9002	QRD161J-1R0	C RESISTOR	1.0 5% 1/4W	
	R9003	QRD161J-1R0	C RESISTOR	1.0 5% 1/4W	
	R9004	QRD161J-471	C RESISTOR	470 5% 1/4W	
	R9005	QRD161J-152	C RESISTOR	1.5K 5% 1/4W	
	R9006	QRD161J-242	C RESISTOR	2.4K 5% 1/4W	
	R9007	QRD161J-102	C RESISTOR	1.0K 5% 1/4W	
	R9008	QRD167J-682	C RESISTOR	6.8K 5% 1/4W	
	R9009	QRD161J-331	C RESISTOR	330 5% 1/4W	
	R9010	QRD161J-331	C RESISTOR	330 5% 1/4W	
	R9011	QRD161J-331	C RESISTOR	330 5% 1/4W	
	R9012	QRD161J-472	C RESISTOR	4.7K 5% 1/4W	
	R9013	QRD161J-471	C RESISTOR	470 5% 1/4W	
	R9014	QRD161J-472	C RESISTOR	4.7K 5% 1/4W	
	R9016	QRD161J-472	C RESISTOR	4.7K 5% 1/4W	

BLOCK NO. 01

⚠	REF.	PARTS NO.	PARTS NAME	REMARKS	SUFFIX
	R9017	QRD161J-472	C RESISTOR	4.7K 5% 1/4W	
	R9018	QRD161J-103	C RESISTOR	10K 5% 1/4W	
	R9019	QRD161J-391	C RESISTOR	390 5% 1/4W	
	R9021	QRD161J-331	C RESISTOR	330 5% 1/4W	
	R9102	QRZ0077-5R6X	F.RESISTOR	5.6 1/0W	
	R9201	QRD161J-103	C RESISTOR	10K 5% 1/4W	
	R9202	QRD161J-103	C RESISTOR	10K 5% 1/4W	
	R9203	QRD161J-221	C RESISTOR	220 5% 1/4W	
	R9301	QRD161J-472	C RESISTOR	4.7K 5% 1/4W	
	R9302	QRD161J-333	C RESISTOR	33K 5% 1/4W	
	R9303	QRD161J-102	C RESISTOR	1.0K 5% 1/4W	
	R9304	QRD161J-390	C RESISTOR	39 5% 1/4W	
⚠	R9401	QRZ0077-4R7X	F RESISTOR	4.7 1/0W	
	R9501	QRD161J-221	C RESISTOR	220 5% 1/4W	
	S8001	QSQ4H11-V12Z	TACT SWITCH	POWER	
	S8002	QSQ4H11-V12Z	TACT SWITCH	AUX	
	S8003	QSQ4H11-V12Z	TACT SWITCH	VOLUME+	
	S8004	QSQ4H11-V12Z	TACT SWITCH	VOLUME-	
	S8011	QSQ4H11-V12Z	TACT SWITCH	TUNER	
	S8012	QSQ4H11-V12Z	TACT SWITCH	UP	
	S8013	QSQ4H11-V12Z	TACT SWITCH	STOP	
	S8014	QSQ4H11-V12Z	TACT SWITCH	TAPE	
	S8015	QSQ4H11-V12Z	TACT SWITCH	CD	
	S8016	QSQ4H11-V12Z	TACT SWITCH	DOWN	
	S8017	QSQ4H11-V12Z	TACT SWITCH	CLOCK	
	S8018	QSQ4H11-V12Z	TACT SWITCH	REC	
	S8019	QSQ4H11-V12Z	TACT SWITCH	SBASS	
	S8020	QSQ4H11-V12Z	TACT SWITCH	SNOOSE	
	S8061	QSW0122-001	PUSH SWITCH	CD DOOR	
	Z 901	EMG7331-003Z	FUSE CLIP		
	Z 903	EMG7331-003Z	FUSE CLIP		
	Z 911	EMG7331-003Z	FUSE CLIP		
	Z 913	EMG7331-003Z	FUSE CLIP		

■ Main Board (UB/UF/US/UX/U)

BLOCK NO. 02

⚠	REF.	PARTS NO.	PARTS NAME	REMARKS	SUFFIX
⚠	C 901	QFLC1HJ-104ZM	M CAPACITOR	.10MF 5% 50V	
⚠	C 902	QFLC1HJ-104ZM	M CAPACITOR	.10MF 5% 50V	
⚠	C 903	QFLC1HJ-104ZM	M CAPACITOR	.10MF 5% 50V	
⚠	C 904	QFLC1HJ-104ZM	M CAPACITOR	.10MF 5% 50V	
	CN301	VMC0314-S20	CONNECTOR		
	CN302	QGB1214J1-06S	CONNECTOR		
	CN303	VMC0163-010	CONNECTOR		
	CN304	QGF1205C1-07	CONNECTOR		
	CN531	VMC0041-003	CONNECTOR		U,UB,US,UX
	CN801	VMC0289-S03	CONNECTOR		
	CN802	VMC0163-R05	CONNECTOR		
	CN901	VMC0040-002	CONNECTOR		
	C1001	QCBB1HK-101Y	C CAPACITOR	100PF 10% 50V	
	C1002	QCC31EM-104ZV	C CAPACITOR	.10MF 20% 25V	
	C1003	QCC31EM-104ZV	C CAPACITOR	.10MF 20% 25V	
	C1006	QTE1C03-106Z	E CAPACITOR		
	C1021	QFN41HJ-823	M CAPACITOR	.082MF 5% 50V	
	C1022	QFN41HJ-823	M CAPACITOR	.082MF 5% 50V	
	C1025	QTE1A03-226Z	E CAPACITOR		
	C1026	QFV71HJ-334ZM	M CAPACITOR	.33MF 5% 50V	
	C1051	QCS11HJ-100	C CAPACITOR	10PF 5% 50V	
	C1053	QTE1C03-106Z	E CAPACITOR		
	C1054	QFN31HJ-392Z	M CAPACITOR	3900PF 5% 50V	
	C1055	QET41EM-475	E CAPACITOR	4.7MF 20% 25V	
	C1056	QTE1C03-106Z	E CAPACITOR		
	C1070	QET41EM-475	E CAPACITOR	4.7MF 20% 25V	
	C1082	QFLB1HJ-563	TF CAPACITOR	.056MF 5% 50V	
	C1083	QFLB1HJ-563	TF CAPACITOR	.056MF 5% 50V	
	C1084	QFN41HJ-472	M CAPACITOR	4700PF 5% 50V	
	C2001	QCBB1HK-101Y	C CAPACITOR	100PF 10% 50V	
	C2002	QCC31EM-104ZV	C CAPACITOR	.10MF 20% 25V	
	C2003	QCC31EM-104ZV	C CAPACITOR	.10MF 20% 25V	
	C2006	QTE1C03-106Z	E CAPACITOR		
	C2021	QFN41HJ-823	M CAPACITOR	.082MF 5% 50V	
	C2022	QFN41HJ-823	M CAPACITOR	.082MF 5% 50V	
	C2025	QTE1A03-226Z	E CAPACITOR		
	C2026	QFV71HJ-334ZM	M CAPACITOR	.33MF 5% 50V	
	C2051	QCS11HJ-100	C CAPACITOR	10PF 5% 50V	
	C2053	QTE1C03-106Z	E CAPACITOR		
	C2054	QFN31HJ-392Z	M CAPACITOR	3900PF 5% 50V	
	C2055	QET41EM-475	E CAPACITOR	4.7MF 20% 25V	
	C2056	QTE1C03-106Z	E CAPACITOR		
	C2070	QET41EM-475	E CAPACITOR	4.7MF 20% 25V	
	C2082	QFLB1HJ-563	TF CAPACITOR	.056MF 5% 50V	
	C2083	QFLB1HJ-563	TF CAPACITOR	.056MF 5% 50V	
	C2084	QFN41HJ-472	M CAPACITOR	4700PF 5% 50V	
	C3001	QETM1EM-688	E CAPACITOR	6800MF 20% 25V	
	C3002	QFLC1HJ-104ZM	M CAPACITOR	.10MF 5% 50V	
	C3003	QET41CM-107	E CAPACITOR	100MF 20% 16V	
	C3004	QETC1AM-337ZN	E CAPACITOR	330MF 20% 10V	
	C3005	QETC1AM-336ZM	E CAPACITOR	33MF 20% 10V	
	C3006	QETC1HM-225Z	E CAPACITOR	2.2MF 20% 50V	
	C3010	QETC1HM-684ZN	E CAPACITOR	.68MF 20% 50V	
	C3011	QCVB1CN-103Y	C CAPACITOR	.010MF 30% 16V	
	C3021	QET41CM-476	E CAPACITOR	47MF 20% 16V	

BLOCK NO. 02

⚠	REF.	PARTS NO.	PARTS NAME	REMARKS	SUFFIX
	C3022	QET41AM-476	E CAPACITOR	47MF 20% 10V	
	C3031	QET41HM-105	E CAPACITOR	1.0MF 20% 50V	
	C3032	QET41HM-105	E CAPACITOR	1.0MF 20% 50V	
	C3033	QFLB1HJ-563	TF CAPACITOR	.056MF 5% 50V	
	C3034	QFLB1HJ-563	TF CAPACITOR	.056MF 5% 50V	
	C3035	QET41HM-105	E CAPACITOR	1.0MF 20% 50V	
	C3036	QET41CM-106	E CAPACITOR	10MF 20% 16V	
	C3037	QET41CM-106	E CAPACITOR	10MF 20% 16V	
	C3041	QET41EM-106	E CAPACITOR	10MF 20% 25V	
	C3051	QET41CM-476	E CAPACITOR	47MF 20% 16V	
	C3052	QET41CM-476	E CAPACITOR	47MF 20% 16V	
	C3070	QER41HM-105	E CAPACITOR	1.0MF 20% 50V	
	C3081	QET41CM-227	E CAPACITOR	220MF 20% 16V	
	C3083	QET41HM-474	E CAPACITOR	.47MF 20% 50V	
	C3084	QET41HM-474	E CAPACITOR	.47MF 20% 50V	
	C3085	QET41HM-474	E CAPACITOR	.47MF 20% 50V	
	C3086	QET41EM-106	E CAPACITOR	10MF 20% 25V	
	C3087	QETC1HM-224Z	E CAPACITOR	.22MF 20% 50V	
	C5301	QEK41CM-226	E CAPACITOR	22MF 20% 16V	U,UB,US,UX
	C5302	QEK41CM-226	E CAPACITOR	22MF 20% 16V	U,UB,US,UX
	C5303	QCS31HJ-390Z	C CAPACITOR	39PF 5% 50V	U,UB,US,UX
	C5304	QEK41HM-105	E CAPACITOR	1.0MF 20% 50V	U,UB,US,UX
	C5305	QFV41HJ-823	TF CAPACITOR	.082MF 5% 50V	U,UB,US,UX
	C5306	QEK41CM-106	E CAPACITOR	10MF 20% 16V	U,UB,US,UX
	C5307	QEK41HM-104	E CAPACITOR	.10MF 20% 50V	U,UB,US,UX
	C5308	QEK41HM-105	E CAPACITOR	1.0MF 20% 50V	U,UB,US,UX
	C8011	QCVB1CN-103Y	C CAPACITOR	.010MF 30% 16V	
	C8012	QCVB1CN-103Y	C CAPACITOR	.010MF 30% 16V	
	C9001	QET41CM-226	E CAPACITOR	22MF 20% 16V	
	C9003	QCVB1CN-103Y	C CAPACITOR	.010MF 30% 16V	
	C9004	QCBB1HK-221Y	C CAPACITOR	220PF 10% 50V	
	C9201	QET41CM-476	E CAPACITOR	47MF 20% 16V	
	C9202	QCVB1CN-103Y	C CAPACITOR	.010MF 30% 16V	
	C9203	QET41CM-106	E CAPACITOR	10MF 20% 16V	
	C9301	QET41AM-107	E CAPACITOR	100MF 20% 10V	
	C9302	QET41HM-475	E CAPACITOR	4.7MF 20% 50V	
	C9501	QET41AM-477	E CAPACITOR	470MF 20% 10V	
⚠	D 901	6A10E2	SI DIODE		
⚠	D 902	6A10E2	SI DIODE		
⚠	D 903	6A10E2	SI DIODE		
⚠	D 904	6A10E2	SI DIODE		
⚠	D 905	6A10E2	SI DIODE		
	D3021	MTZ4.3JB	ZENER DIODE		
	D3031	1SS133	SI DIODE		
	D3032	1SS133	SI DIODE		
	D3033	1SS133	SI DIODE		
	D3034	1SS133	SI DIODE		
	D3070	MTZ6.8JB	DIODE		
	D5301	1SS133	SI DIODE		U,UB,US,UX
	D5302	1SS133	SI DIODE		U,UB,US,UX
	D8101	L-34ID-T12	LED	STANDBY LED RED	
	D9001	1SS133	SI DIODE		
	D9002	MTZ8.2JC	ZENER DIODE		
	D9003	MTZ10JAT-77	ZENER DIODE		
	D9102	1SR35-100	SI DIODE		

BLOCK NO. 02

⚠	REF.	PARTS NO.	PARTS NAME	REMARKS	SUFFIX
	D9201	MTZ4.3JB	ZENER DIODE		
	D9301	MTZ3.9JB	Z DIODE		
	D9302	1SS133	SI DIODE		
	D9303	1SS133	SI DIODE		
	D9501	1SS133	SI DIODE		
⚠	IC 31	LA4705NA	IC		
	IC 32	BA15218N	IC		
	IC 35	BA15218N	IC		
	IC 38	BH3852S	IC		
	IC531	VC4580L	IC		U,UB,US,UX
⚠	J 901	QNC0001-001	AC SOCKET 8TYPE		
⚠	J 902	QMA431B-V01	FILM CAPACITOR		
	JS801	QSW0547-001	ROTARY ENCODER		
	J3001	QNN0090-001	PIN JACK	KUNMING HSP-242	
	J3002	QNB0035-001	SPK TERMINAL	KUNMIG HSP-324V	
	J3003	QNS0072-001	HEADPHONE JACK		
	J5301	VMJ4040-001	JACK		U,UB,US,UX
	K9401	VQZ0107-002	INDUCTOR		
	L3070	VQZ0048-007	INDUCTOR		
	Q1010	2SD2144S(VW)	TRANSISTOR		
	Q1031	KTC3199(GL)-T	TRANSISTOR		
	Q1041	2SC2001(L,K)	TRANSISTOR		
	Q1070	KTC3199(GL)-T	TRANSISTOR		
	Q2010	2SD2144S(VW)	TRANSISTOR		
	Q2031	KTC3199(GL)-T	TRANSISTOR		
	Q2041	2SC2001(L,K)	TRANSISTOR		
	Q2070	KTC3199(GL)-T	TRANSISTOR		
	Q3010	KTC3199(GL)-T	TRANSISTOR		
	Q3041	KRA101M-T	TRANSISTOR		
	Q3070	KRA101M-T	TRANSISTOR		
	Q5301	KTC3199(GL)-T	TRANSISTOR		U,UB,US,UX
	Q5302	KTC3199(GL)-T	TRANSISTOR		U,UB,US,UX
⚠	Q9001	2SB1565(E,F)	TRANSISTOR		
	Q9002	KTC3199(GL)-T	TRANSISTOR		
	Q9003	KTA1267(YG)-T	TRANSISTOR		
	Q9004	DTC144TS	TRANSISTOR		
	Q9005	UN4110	TRANSISTOR		
	Q9006	KTC3199(GL)-T	TRANSISTOR		
	Q9007	KTC3199(GL)-T	TRANSISTOR		
⚠	Q9201	2SA1359/OY/	TRANSISTOR		
	Q9202	KTC3199(GL)-T	TRANSISTOR		
	Q9301	KTA1267(YG)-T	TRANSISTOR		
	Q9302	KTC3199(GL)-T	TRANSISTOR		
	Q9501	2SC2001(L,K)	TRANSISTOR		
	R1001	QRD161J-2R2	C RESISTOR	2.2 5% 1/4W	
	R1002	QRD161J-2R2	C RESISTOR	2.2 5% 1/4W	
	R1003	QRD161J-151	C RESISTOR	150 5% 1/4W	
	R1004	QRD161J-471	C RESISTOR	470 5% 1/4W	
	R1011	QRD161J-224	C RESISTOR	220K 5% 1/4W	
	R1012	QRD161J-623	C RESISTOR	62K 5% 1/4W	
	R1013	QRD161J-153	C RESISTOR	15K 5% 1/4W	
	R1014	QRD161J-272	C RESISTOR	2.7K 5% 1/4W	
	R1015	QRD161J-153	C RESISTOR	15K 5% 1/4W	
	R1022	QRD161J-224	C RESISTOR	220K 5% 1/4W	
	R1023	QRD161J-182	C RESISTOR	1.8K 5% 1/4W	

BLOCK NO. 02

⚠	REF.	PARTS NO.	PARTS NAME	REMARKS	SUFFIX
	R1024	QRD161J-202	C RESISTOR	2.0K 5% 1/4W	
	R1026	QRD161J-153	C RESISTOR	15K 5% 1/4W	
	R1027	QRD161J-103	C RESISTOR	10K 5% 1/4W	
	R1028	QRD161J-472	C RESISTOR	4.7K 5% 1/4W	
	R1029	QRD161J-472	C RESISTOR	4.7K 5% 1/4W	
	R1031	QRD161J-223	C RESISTOR	22K 5% 1/4W	
	R1032	QRD161J-223	C RESISTOR	22K 5% 1/4W	
	R1033	QRD161J-103	C RESISTOR	10K 5% 1/4W	
	R1041	QRD161J-472	C RESISTOR	4.7K 5% 1/4W	
	R1051	QRD161J-154	C RESISTOR	150K 5% 1/4W	
	R1052	QRD161J-102	C RESISTOR	1.0K 5% 1/4W	
	R1054	QRD161J-472	C RESISTOR	4.7K 5% 1/4W	
	R1055	QRD167J-332	C RESISTOR	3.3K 5% 1/4W	
	R1056	QRD161J-103	C RESISTOR	10K 5% 1/4W	
	R1057	QRD161J-124	C RESISTOR	120K 5% 1/4W	
	R1058	QRD161J-823	C RESISTOR	82K 5% 1/4W	
	R1070	QRE141J-183Y	C RESISTOR	18K 5% 1/4W	
	R1071	QRD161J-153	C RESISTOR	15K 5% 1/4W	
	R1072	QRD161J-272	C RESISTOR	2.7K 5% 1/4W	
	R1073	QRD161J-102	C RESISTOR	1.0K 5% 1/4W	
	R1074	QRD161J-152	C RESISTOR	1.5K 5% 1/4W	
	R1082	QRD161J-302	C RESISTOR	3.0K 5% 1/4W	
	R1083	QRD161J-182	C RESISTOR	1.8K 5% 1/4W	
	R1091	QRD161J-333	C RESISTOR	33K 5% 1/4W	
	R1093	QRD161J-103	C RESISTOR	10K 5% 1/4W	
	R2001	QRD161J-2R2	C RESISTOR	2.2 5% 1/4W	
	R2002	QRD161J-2R2	C RESISTOR	2.2 5% 1/4W	
	R2003	QRD161J-151	C RESISTOR	150 5% 1/4W	
	R2004	QRD161J-471	C RESISTOR	470 5% 1/4W	
	R2011	QRD161J-224	C RESISTOR	220K 5% 1/4W	
	R2012	QRD161J-623	C RESISTOR	62K 5% 1/4W	
	R2013	QRD161J-153	C RESISTOR	15K 5% 1/4W	
	R2014	QRD161J-272	C RESISTOR	2.7K 5% 1/4W	
	R2015	QRD161J-153	C RESISTOR	15K 5% 1/4W	
	R2022	QRD161J-224	C RESISTOR	220K 5% 1/4W	
	R2023	QRD161J-182	C RESISTOR	1.8K 5% 1/4W	
	R2024	QRD161J-202	C RESISTOR	2.0K 5% 1/4W	
	R2026	QRD161J-153	C RESISTOR	15K 5% 1/4W	
	R2027	QRD161J-103	C RESISTOR	10K 5% 1/4W	
	R2028	QRD161J-472	C RESISTOR	4.7K 5% 1/4W	
	R2029	QRD161J-472	C RESISTOR	4.7K 5% 1/4W	
	R2031	QRD161J-223	C RESISTOR	22K 5% 1/4W	
	R2032	QRD161J-223	C RESISTOR	22K 5% 1/4W	
	R2033	QRD161J-103	C RESISTOR	10K 5% 1/4W	
	R2041	QRD161J-472	C RESISTOR	4.7K 5% 1/4W	
	R2051	QRD161J-154	C RESISTOR	150K 5% 1/4W	
	R2052	QRD161J-102	C RESISTOR	1.0K 5% 1/4W	
	R2054	QRD161J-472	C RESISTOR	4.7K 5% 1/4W	
	R2055	QRD167J-332	C RESISTOR	3.3K 5% 1/4W	
	R2056	QRD161J-103	C RESISTOR	10K 5% 1/4W	
	R2057	QRD161J-124	C RESISTOR	120K 5% 1/4W	
	R2058	QRD161J-823	C RESISTOR	82K 5% 1/4W	
	R2070	QRE141J-183Y	C RESISTOR	18K 5% 1/4W	
	R2071	QRD161J-153	C RESISTOR	15K 5% 1/4W	
	R2072	QRD161J-272	C RESISTOR	2.7K 5% 1/4W	

BLOCK NO. 02

⚠	REF.	PARTS NO.	PARTS NAME	REMARKS	SUFFIX
	R2073	QRD161J-102	C RESISTOR	1.0K 5% 1/4W	
	R2074	QRD161J-152	C RESISTOR	1.5K 5% 1/4W	
	R2082	QRD161J-302	C RESISTOR	3.0K 5% 1/4W	
	R2083	QRD161J-182	C RESISTOR	1.8K 5% 1/4W	
	R2091	QRD161J-333	C RESISTOR	33K 5% 1/4W	
	R2093	QRD161J-103	C RESISTOR	10K 5% 1/4W	
	R3001	QRD161J-103	C RESISTOR	10K 5% 1/4W	
	R3010	QRD161J-103	C RESISTOR	10K 5% 1/4W	
	R3021	QRD161J-101	C RESISTOR	100 5% 1/4W	
	R3022	QRD161J-152	C RESISTOR	1.5K 5% 1/4W	
	R3031	QRD161J-472	C RESISTOR	4.7K 5% 1/4W	
	R3032	QRD161J-472	C RESISTOR	4.7K 5% 1/4W	
	R3033	QRD161J-124	C RESISTOR	120K 5% 1/4W	
	R3034	QRD161J-154	C RESISTOR	150K 5% 1/4W	
	R3035	QRD161J-223	C RESISTOR	22K 5% 1/4W	
	R3036	QRD161J-513	C RESISTOR	51K 5% 1/4W	
	R3051	QRD161J-101	C RESISTOR	100 5% 1/4W	
	R3052	QRD161J-473	C RESISTOR	47K 5% 1/4W	
	R3053	QRD161J-473	C RESISTOR	47K 5% 1/4W	
	R3081	QRD161J-101	C RESISTOR	100 5% 1/4W	
	R3082	QRD161J-124	C RESISTOR	120K 5% 1/4W	
	R3083	QRD161J-154	C RESISTOR	150K 5% 1/4W	
	R3084	QRD161J-124	C RESISTOR	120K 5% 1/4W	
	R5301	QRD161J-221	C RESISTOR	220 5% 1/4W	U,UB,US,UX
	R5302	QRD161J-154	C RESISTOR	150K 5% 1/4W	U,UB,US,UX
	R5303	QRD161J-154	C RESISTOR	150K 5% 1/4W	U,UB,US,UX
	R5304	QRD161J-103	C RESISTOR	10K 5% 1/4W	U,UB,US,UX
	R5305	QRD161J-392	C RESISTOR	3.9K 5% 1/4W	U,UB,US,UX
	R5306	QRD161J-564	C RESISTOR	560K 5% 1/4W	U,UB,US,UX
	R5307	QRD161J-104	C RESISTOR	100K 5% 1/4W	U,UB,US,UX
	R5308	QRD161J-102	C RESISTOR	1.0K 5% 1/4W	U,UB,US,UX
	R5309	QRD161J-103	C RESISTOR	10K 5% 1/4W	U,UB,US,UX
	R5310	QRD161J-103	C RESISTOR	10K 5% 1/4W	U,UB,US,UX
	R5311	QRD161J-474	C RESISTOR	470K 5% 1/4W	U,UB,US,UX
	R5312	QRD161J-471	C RESISTOR	470 5% 1/4W	U,UB,US,UX
	R5313	QRD161J-102	C RESISTOR	1.0K 5% 1/4W	U,UB,US,UX
	R5314	QRD161J-273	C RESISTOR	27K 5% 1/4W	U,UB,US,UX
	R5315	QRD161J-103	C RESISTOR	10K 5% 1/4W	U,UB,US,UX
	R8001	QRD161J-102	C RESISTOR	1.0K 5% 1/4W	
	R8002	QRD161J-102	C RESISTOR	1.0K 5% 1/4W	
	R8003	QRD161J-122	C RESISTOR	1.2K 5% 1/4W	
	R8005	QRD161J-473	C RESISTOR	47K 5% 1/4W	
	R8011	QRD161J-102	C RESISTOR	1.0K 5% 1/4W	
	R8012	QRD161J-102	C RESISTOR	1.0K 5% 1/4W	
	R8013	QRD161J-122	C RESISTOR	1.2K 5% 1/4W	
	R8014	QRD161J-152	C RESISTOR	1.5K 5% 1/4W	
	R8015	QRD161J-222	C RESISTOR	2.2K 5% 1/4W	
	R8016	QRD161J-272	C RESISTOR	2.7K 5% 1/4W	
	R8017	QRD161J-392	C RESISTOR	3.9K 5% 1/4W	
	R8018	QRD167J-562	C RESISTOR	5.6K 5% 1/4W	
	R8019	QRD161J-103	C RESISTOR	10K 5% 1/4W	
	R8101	QRD161J-271	C RESISTOR	270 5% 1/4W	
	R9001	QRD161J-1R0	C RESISTOR	1.0 5% 1/4W	
	R9002	QRD161J-1R0	C RESISTOR	1.0 5% 1/4W	
	R9003	QRD161J-1R0	C RESISTOR	1.0 5% 1/4W	

BLOCK NO. 02

⚠	REF.	PARTS NO.	PARTS NAME	REMARKS	SUFFIX
	R9004	QRD161J-471	C RESISTOR	470 5% 1/4W	
	R9005	QRD161J-152	C RESISTOR	1.5K 5% 1/4W	
	R9006	QRD161J-242	C RESISTOR	2.4K 5% 1/4W	
	R9007	QRD161J-102	C RESISTOR	1.0K 5% 1/4W	
	R9008	QRD167J-682	C RESISTOR	6.8K 5% 1/4W	
	R9012	QRD161J-472	C RESISTOR	4.7K 5% 1/4W	
	R9013	QRD161J-471	C RESISTOR	470 5% 1/4W	
	R9014	QRD161J-472	C RESISTOR	4.7K 5% 1/4W	
	R9016	QRD161J-472	C RESISTOR	4.7K 5% 1/4W	
	R9017	QRD161J-472	C RESISTOR	4.7K 5% 1/4W	
	R9018	QRD161J-103	C RESISTOR	10K 5% 1/4W	
	R9019	QRD161J-391	C RESISTOR	390 5% 1/4W	
	R9021	QRZ0077-680	F RESISTOR	68 1/0W	
	R9201	QRD161J-103	C RESISTOR	10K 5% 1/4W	
	R9202	QRD161J-103	C RESISTOR	10K 5% 1/4W	
	R9203	QRD161J-221	C RESISTOR	220 5% 1/4W	
	R9301	QRD161J-472	C RESISTOR	4.7K 5% 1/4W	
	R9302	QRD161J-333	C RESISTOR	33K 5% 1/4W	
	R9303	QRD161J-102	C RESISTOR	1.0K 5% 1/4W	
	R9304	QRD161J-390	C RESISTOR	39 5% 1/4W	
⚠	R9401	QRZ0077-4R7X	F RESISTOR	4.7 1/0W	
	R9501	QRD161J-221	C RESISTOR	220 5% 1/4W	
	S 901	VMZ0126-002	VOLTAGE SELCTOR		
	S8001	QSQ4H11-V12Z	TACT SWITCH	POWER	
	S8002	QSQ4H11-V12Z	TACT SWITCH	AUX	
	S8003	QSQ4H11-V12Z	TACT SWITCH	VOLUME+	
	S8004	QSQ4H11-V12Z	TACT SWITCH	VOLUME-	
	S8011	QSQ4H11-V12Z	TACT SWITCH	TUNER	
	S8012	QSQ4H11-V12Z	TACT SWITCH	UP	
	S8013	QSQ4H11-V12Z	TACT SWITCH	STOP	
	S8014	QSQ4H11-V12Z	TACT SWITCH	TAPE	
	S8015	QSQ4H11-V12Z	TACT SWITCH	CD	
	S8016	QSQ4H11-V12Z	TACT SWITCH	DOWN	
	S8017	QSQ4H11-V12Z	TACT SWITCH	CLOCK	
	S8018	QSQ4H11-V12Z	TACT SWITCH	REC	
	S8019	QSQ4H11-V12Z	TACT SWITCH	SBASS	
	S8020	QSQ4H11-V12Z	TACT SWITCH	SNOOSE	
	S8061	QSW0122-001	PUSH SWITCH	CD DOOR	
	VR531	QVAA46B-V03M	V RESISTOR		U,UB,US,UX
	Z 901	EMG7331-003Z	FUSE CLIP		
	Z 902	EMG7331-003Z	FUSE CLIP		U,UB,US,UX
	Z 903	EMG7331-003Z	FUSE CLIP		
	Z 911	EMG7331-003Z	FUSE CLIP		
	Z 912	EMG7331-003Z	FUSE CLIP		U,UB,US,UX
	Z 913	EMG7331-003Z	FUSE CLIP		

■ LCD System CPU Board (B/E/EE/EN)

BLOCK NO. 03

⚠	REF.	PARTS NO.	PARTS NAME	REMARKS	SUFFIX
	BL701	QLL0044-001	P.LAMP		
	BL702	QLL0044-001	P.LAMP		
	CN701	VMC0163-R10	CONNECTOR	TO TUNER PWB	
	CN711	QGB1214K1-20S	CONNECTOR	TO AMP PWB CONT	
	CN712	QGB1214K1-06S	CONNECTOR	TO AMP PWB SIG.	
	CN731	VMC0163-009	CONNECTOR	TO MECHA PWB	
	CN766	VMC0163-R11	CONNECTOR	TO CD PWB	
	CN781	VMC0289-P03	CONNECTOR	TO FRONT SW PWB	
	CN782	VMC0163-005	CONNECTOR	TO TOP SW PWB	
	C7001	NCS21HJ-180AY	C CAPACITOR	18PF 5% 50V	
	C7002	NCS21HJ-180AY	C CAPACITOR	18PF 5% 50V	
	C7003	NCB21HK-102AY	C CAPACITOR	1000PF 10% 50V	
	C7004	NCS21HJ-360AY	C CAPACITOR	36PF 5% 50V	
	C7005	NCS21HJ-390AY	C CAPACITOR	39PF 5% 50V	
	C7006	NCS21HJ-200AY	C CAPACITOR	20PF 5% 50V	
	C7007	NCS21HJ-220AY	C CAPACITOR	22PF 5% 50V	
	C7008	NCB21HK-102AY	C CAPACITOR	1000PF 10% 50V	
	C7009	NCB21HK-102AY	C CAPACITOR	1000PF 10% 50V	
	C7011	QER41AM-107	E CAPACITOR	100MF 20% 10V	
	C7012	NCB21HK-103AY	C CAPACITOR	.010MF 10% 50V	
	C7013	QFLC1HJ-104ZM	M CAPACITOR	.10MF 5% 50V	
	C7014	QER41CM-106	E CAPACITOR	10MF 20% 16V	
	C7021	QER41CM-476	E CAPACITOR	47MF 20% 16V	
	C7022	NCB21HK-102AY	C CAPACITOR	1000PF 10% 50V	
	C7031	QETBOJM-228N	E CAPACITOR	2200MF 20% 6.3V	
	C7051	QER61HM-684ZM	E CAPACITOR	.68MF 20% 50V	
	C7052	QER41HM-225	E CAPACITOR	2.2MF 20% 50V	
	C7081	NCB21CK-104X	C CAPACITOR	.10MF 10% 16V	
	C7601	NCS21HJ-151X	C CAPACITOR	150PF 5% 50V	
	C7602	NCS21HJ-151X	C CAPACITOR	150PF 5% 50V	
	C7619	NCS21HJ-271AY	C CAPACITOR	270PF 5% 50V	
	C7620	NCS21HJ-271AY	C CAPACITOR	270PF 5% 50V	
	C7621	NCS21HJ-271AY	C CAPACITOR	270PF 5% 50V	
	C7622	NCS21HJ-271AY	C CAPACITOR	270PF 5% 50V	
	C7633	NCB21HK-102AY	C CAPACITOR	1000PF 10% 50V	
	C7641	NCS21HJ-151X	C CAPACITOR	150PF 5% 50V	
	C7644	QER41HM-105	E CAPACITOR	1.0MF 20% 50V	
	C7646	QER41HM-105	E CAPACITOR	1.0MF 20% 50V	
	C7701	NCS21HJ-151X	C CAPACITOR	150PF 5% 50V	
	C7702	NCS21HJ-151X	C CAPACITOR	150PF 5% 50V	
	C7705	NCS21HJ-331AY	C CAPACITOR	330PF 5% 50V	
	C7723	NCB21HK-102AY	C CAPACITOR	1000PF 10% 50V	
	C7724	NCB21HK-102AY	C CAPACITOR	1000PF 10% 50V	
	C7734	NCB21HK-102AY	C CAPACITOR	1000PF 10% 50V	
	C7744	QER41HM-225	E CAPACITOR	2.2MF 20% 50V	
	C7745	QER61HM-335ZM	E CAPACITOR	3.3MF 20% 50V	
	C7746	QER41HM-225	E CAPACITOR	2.2MF 20% 50V	
	C7802	NCB21HK-103AY	C CAPACITOR	MICOM NOISE	
	C7803	NCB21HK-102AY	C CAPACITOR	1000PF 10% 50V	
	C7810	NCB21HK-103AY	C CAPACITOR	.010MF 10% 50V	
	DI701	QLD0042-001	LCD	44PIN	
	D7001	1N4148M-T2	SI DIODE	US5V	
⚠	D7011	MTZ8.2JB	DIODE	SHORT HOGO	
⚠	D7012	1N4148M-T2	SI DIODE	SHORT HOGO	
	D7031	1N4148M-T2	SI DIODE	BUCKUP	

BLOCK NO. 03

⚠	REF.	PARTS NO.	PARTS NAME	REMARKS	SUFFIX
	D7032	1N4148M-T2	SI DIODE	CLOCK	
	D7051	1N4148M-T2	SI DIODE	RESET	
	D7061	MTZ5.1JC	ZENER DIODE	BUCKUP CONT.	
	D7091	1N4148M-T2	SI DIODE	US5V	
	IC701	UPD78064GF-108	IC	SYSTEM MICON	
	IC702	PIC-21043SP	REMOKON SENSOR		
⚠	IC703	KIA78S06P-T	IC	US6V REG	
	K7001	VQZ0107-002	INDUCTOR	ICVSS	
	K7002	VQZ0107-002	INDUCTOR	AVSS	
	K7003	VQZ0107-002	INDUCTOR		
	K7004	VQZ0107-002	INDUCTOR		
	L7002	VQP0033-100Z	INDUCTOR	US5V	
	L7003	VQP0033-100Z	INDUCTOR	AVDD	
	L7005	VQP0018-4R7	INDUCTOR	AVREF	
	L7701	VQP0018-4R7	INDUCTOR		
	L7702	VQP0018-4R7	INDUCTOR		
	Q7001	2SC2668(O)	TRANSISTOR	CLOCK SHIFT	
	Q7002	2SC2668(O)	TRANSISTOR	CLOCK SHIFT	
	Q7031	2SA1037AKT146	CHIP TRANSISTOR	SW5V	
	Q7051	DTC114TKT146	TRANSISTOR	RESET SW	
	Q7061	2SC2412K/R/-X	TRANSISTOR	BACKUP CONT	
	Q7091	2SC2412K/R/-X	TRANSISTOR	POUT DRIVER	
	Q7092	2SA1037AKT146	CHIP TRANSISTOR	STANDBY LED CON	
	Q7601	DTC144TKA-X	TRANSISTOR		
	Q7602	DTC144TKA-X	TRANSISTOR		
	Q7603	2SC2412K/R/-X	TRANSISTOR		
	R7005	NRSA02J-822NY	MG RESISTOR	8.2K 5% 1/10W	
	R7006	NRSA02J-822NY	MG RESISTOR	8.2K 5% 1/10W	
	R7031	NRSA02J-331NY	MG RESISTOR	330 5% 1/10W	
	R7032	NRSA02J-103NY	MG RESISTOR	10K 5% 1/10W	
	R7033	NRSA02J-102NY	MG RESISTOR	1.0K 5% 1/10W	
	R7051	NRSA02J-103NY	MG RESISTOR	10K 5% 1/10W	
	R7052	NRSA02J-103NY	MG RESISTOR	10K 5% 1/10W	
	R7061	NRSA02J-333NY	MG RESISTOR	33K 5% 1/10W	
	R7062	NRSA02J-473NY	MG RESISTOR	47K 5% 1/10W	
	R7063	NRSA02J-104NY	MG RESISTOR	100K 5% 1/10W	
	R7081	NRSA02J-104NY	MG RESISTOR	100K 5% 1/10W	
	R7082	NRSA02J-104NY	MG RESISTOR	100K 5% 1/10W	
	R7083	NRSA02J-104NY	MG RESISTOR	100K 5% 1/10W	
	R7084	NRSA02J-273NY	MG RESISTOR	27K 5% 1/10W	E,EE,EN
	R7084	NRSA02J-223NY	MG RESISTOR	22K 5% 1/10W	B
	R7093	NRSA02J-153NY	MG RESISTOR	15K 5% 1/10W	
	R7095	NRSA02J-333NY	MG RESISTOR	33K 5% 1/10W	
	R7096	NRSA02J-102NY	MG RESISTOR	1.0K 5% 1/10W	
	R7429	NRSA02J-913NY	MG RESISTOR	91K 5% 1/10W	
	R7528	NRSA02J-223NY	MG RESISTOR	22K 5% 1/10W	
	R7529	NRSA02J-473NY	MG RESISTOR	47K 5% 1/10W	
	R7530	NRSA02J-103NY	MG RESISTOR	10K 5% 1/10W	
	R7544	NRSA02J-114NYM	MG RESISTOR	110K 5% 1/10W	
	R7545	NRSA02J-114NYM	MG RESISTOR	110K 5% 1/10W	
	R7602	NRSA02J-102NY	MG RESISTOR	1.0K 5% 1/10W	
	R7614	NRSA02J-103NY	MG RESISTOR	10K 5% 1/10W	
	R7615	NRSA02J-103NY	MG RESISTOR	10K 5% 1/10W	
	R7619	NRSA02J-122NY	MG RESISTOR	1.2K 5% 1/10W	
	R7620	NRSA02J-102NY	MG RESISTOR	1.0K 5% 1/10W	

BLOCK NO. 03

⚠	REF.	PARTS NO.	PARTS NAME	REMARKS	SUFFIX
	R7621	NRSA02J-122NY	MG RESISTOR	1.2K 5% 1/10W	
	R7622	NRSA02J-102NY	MG RESISTOR	1.0K 5% 1/10W	
	R7625	NRSA02J-823NY	MG RESISTOR	82K 5% 1/10W	
	R7628	NRSA02J-823NY	MG RESISTOR	82K 5% 1/10W	
	R7629	NRSA02J-103NY	MG RESISTOR	10K 5% 1/10W	
	R7630	NRSA02J-563NY	MG RESISTOR	56K 5% 1/10W	
	R7631	NRSA02J-104NY	MG RESISTOR	100K 5% 1/10W	
	R7632	NRSA02J-103NY	MG RESISTOR	10K 5% 1/10W	
	R7633	NRSA02J-103NY	MG RESISTOR	10K 5% 1/10W	
	R7634	NRSA02J-103NY	MG RESISTOR	10K 5% 1/10W	
	R7635	NRSA02J-104NY	MG RESISTOR	100K 5% 1/10W	
	R7639	NRSA02J-222NY	MG RESISTOR	2.2K 5% 1/10W	
	R7641	NRSA02J-102NY	MG RESISTOR	1.0K 5% 1/10W	
	R7642	NRSA02J-102NY	MG RESISTOR	1.0K 5% 1/10W	
	R7643	NRSA02J-103NY	MG RESISTOR	10K 5% 1/10W	
	R7644	NRSA02J-683NY	MG RESISTOR	68K 5% 1/10W	
	R7646	NRSA02J-683NY	MG RESISTOR	68K 5% 1/10W	
	R7647	NRSA02J-104NY	MG RESISTOR	100K 5% 1/10W	
	R7648	NRSA02J-394NY	MG RESISTOR	390K 5% 1/10W	
	R7649	NRSA02J-823NY	MG RESISTOR	82K 5% 1/10W	
	R7701	NRSA02J-103NY	MG RESISTOR	10K 5% 1/10W	
	R7702	NRSA02J-103NY	MG RESISTOR	10K 5% 1/10W	
	R7703	NRSA02J-102NY	MG RESISTOR	1.0K 5% 1/10W	
	R7704	NRSA02J-103NY	MG RESISTOR	10K 5% 1/10W	
	R7705	NRSA02J-102NY	MG RESISTOR	1.0K 5% 1/10W	
	R7711	NRSA02J-222NY	MG RESISTOR	2.2K 5% 1/10W	
	R7712	NRSA02J-102NY	MG RESISTOR	1.0K 5% 1/10W	
	R7713	NRSA02J-222NY	MG RESISTOR	2.2K 5% 1/10W	
	R7715	NRSA02J-222NY	MG RESISTOR	2.2K 5% 1/10W	
	R7716	NRSA02J-472NY	MG RESISTOR	4.7K 5% 1/10W	
	R7717	NRSA02J-472NY	MG RESISTOR	4.7K 5% 1/10W	
	R7718	NRSA02J-222NY	MG RESISTOR	2.2K 5% 1/10W	
	R7719	NRSA02J-102NY	MG RESISTOR	1.0K 5% 1/10W	
	R7720	NRSA02J-102NY	MG RESISTOR	1.0K 5% 1/10W	
	R7721	NRSA02J-102NY	MG RESISTOR	1.0K 5% 1/10W	
	R7722	NRSA02J-102NY	MG RESISTOR	1.0K 5% 1/10W	
	R7723	NRSA02J-222NY	MG RESISTOR	2.2K 5% 1/10W	
	R7724	NRSA02J-222NY	MG RESISTOR	2.2K 5% 1/10W	
	R7725	NRSA02J-222NY	MG RESISTOR	2.2K 5% 1/10W	
	R7726	NRSA02J-222NY	MG RESISTOR	2.2K 5% 1/10W	
	R7728	NRSA02J-222NY	MG RESISTOR	2.2K 5% 1/10W	
	R7729	NRSA02J-222NY	MG RESISTOR	2.2K 5% 1/10W	
	R7730	NRSA02J-222NY	MG RESISTOR	2.2K 5% 1/10W	
	R7731	NRSA02J-222NY	MG RESISTOR	2.2K 5% 1/10W	
	R7732	NRSA02J-222NY	MG RESISTOR	2.2K 5% 1/10W	
	R7733	NRSA02J-222NY	MG RESISTOR	2.2K 5% 1/10W	
	R7734	NRSA02J-222NY	MG RESISTOR	2.2K 5% 1/10W	
	R7735	NRSA02J-222NY	MG RESISTOR	2.2K 5% 1/10W	
	R7738	NRSA02J-222NY	MG RESISTOR	2.2K 5% 1/10W	
	R7739	NRSA02J-222NY	MG RESISTOR	2.2K 5% 1/10W	
	R7741	NRSA02J-222NY	MG RESISTOR	2.2K 5% 1/10W	
	R7742	NRSA02J-222NY	MG RESISTOR	2.2K 5% 1/10W	
	R7743	NRSA02J-222NY	MG RESISTOR	2.2K 5% 1/10W	
	R7744	NRSA02J-563NY	MG RESISTOR	56K 5% 1/10W	
	R7745	NRSA02J-473NY	MG RESISTOR	47K 5% 1/10W	

BLOCK NO. 03

⚠	REF.	PARTS NO.	PARTS NAME	REMARKS	SUFFIX
	R7746	NRSA02J-333NY	MG RESISTOR	33K 5% 1/10W	
	R7747	NRSA02J-222NY	MG RESISTOR	2.2K 5% 1/10W	
	R7748	NRSA02J-153NY	MG RESISTOR	15K 5% 1/10W	
	R7749	NRSA02J-123NY	MG RESISTOR	12K 5% 1/10W	
	R7750	NRSA02J-222NY	MG RESISTOR	2.2K 5% 1/10W	
	R7799	NRSA02J-102NY	MG RESISTOR	1.0K 5% 1/10W	
	WR 1	VWS302-103K3K	FLAT WIRE		
	X7001	QAX0401-001	CRYSTAL	CLOCK	
	X7002	QAX0410-001Z	CERA LOCK	MAIN CLOCK	

■ LCD System CPU Board (UB/UF/US/UX/U)

BLOCK NO. 04

⚠	REF.	PARTS NO.	PARTS NAME	REMARKS	SUFFIX
	BL701	QLL0044-001	P.LAMP		
	BL702	QLL0044-001	P.LAMP		
	CN701	VMC0163-R10	CONNECTOR	TO TUNER PWB	
	CN711	QGB1214K1-20S	CONNECTOR	TO AMP PWB CONT	
	CN712	QGB1214K1-06S	CONNECTOR	TO AMP PWB SIG.	
	CN731	VMC0163-009	CONNECTOR	TO MECHA PWB	
	CN766	VMC0163-R11	CONNECTOR	TO CD PWB	
	CN781	VMC0289-P03	CONNECTOR	TO FRONT SW PWB	
	CN782	VMC0163-005	CONNECTOR	TO TOP SW PWB	
	C7001	NCS21HJ-180AY	C CAPACITOR	18PF 5% 50V	
	C7002	NCS21HJ-180AY	C CAPACITOR	18PF 5% 50V	
	C7003	NCB21HK-103AY	C CAPACITOR	.010MF 10% 50V	
	C7004	NCS21HJ-360AY	C CAPACITOR	36PF 5% 50V	
	C7005	NCS21HJ-390AY	C CAPACITOR	39PF 5% 50V	
	C7006	NCS21HJ-200AY	C CAPACITOR	20PF 5% 50V	
	C7007	NCS21HJ-220AY	C CAPACITOR	22PF 5% 50V	
	C7008	NCB21HK-102AY	C CAPACITOR	1000PF 10% 50V	
	C7009	NCB21HK-102AY	C CAPACITOR	1000PF 10% 50V	
	C7011	QER41AM-107	E CAPACITOR	100MF 20% 10V	
	C7012	NCB21HK-103AY	C CAPACITOR	.010MF 10% 50V	
	C7013	QFLC1HJ-104ZM	M CAPACITOR	.10MF 5% 50V	
	C7014	QER41CM-106	E CAPACITOR	10MF 20% 16V	
	C7021	QER41CM-476	E CAPACITOR	47MF 20% 16V	
	C7022	NCB21HK-102AY	C CAPACITOR	1000PF 10% 50V	
	C7031	QETB0JM-228	E CAPACITOR	2200MF 20% 6.3V	
	C7051	QER61HM-684ZM	E CAPACITOR	.68MF 20% 50V	
	C7052	QER41HM-225	E CAPACITOR	2.2MF 20% 50V	
	C7081	NCB21CK-104X	C CAPACITOR	.10MF 10% 16V	
	C7601	NCS21HJ-151X	C CAPACITOR	150PF 5% 50V	
	C7602	NCS21HJ-151X	C CAPACITOR	150PF 5% 50V	
	C7619	NCS21HJ-271AY	C CAPACITOR	270PF 5% 50V	
	C7620	NCS21HJ-271AY	C CAPACITOR	270PF 5% 50V	
	C7621	NCS21HJ-271AY	C CAPACITOR	270PF 5% 50V	
	C7622	NCS21HJ-271AY	C CAPACITOR	270PF 5% 50V	
	C7633	NCB21HK-102AY	C CAPACITOR	1000PF 10% 50V	
	C7641	NCS21HJ-151X	C CAPACITOR	150PF 5% 50V	
	C7644	QER41HM-105	E CAPACITOR	1.0MF 20% 50V	
	C7646	QER41HM-105	E CAPACITOR	1.0MF 20% 50V	
	C7701	NCS21HJ-151X	C CAPACITOR	150PF 5% 50V	
	C7702	NCS21HJ-151X	C CAPACITOR	150PF 5% 50V	
	C7705	NCS21HJ-331AY	C CAPACITOR	330PF 5% 50V	
	C7734	NCB21HK-102AY	C CAPACITOR	1000PF 10% 50V	
	C7744	QER41HM-225	E CAPACITOR	2.2MF 20% 50V	
	C7745	QER61HM-335ZM	E CAPACITOR	3.3MF 20% 50V	
	C7746	QER41HM-225	E CAPACITOR	2.2MF 20% 50V	
	C7801	NCB21HK-103AY	C CAPACITOR	.010MF 10% 50V	
	C7802	NCB21HK-103AY	C CAPACITOR	.010MF 10% 50V	
	C7803	NCB21HK-103AY	C CAPACITOR	.010MF 10% 50V	
	C7804	NCB21HK-103AY	C CAPACITOR	.010MF 10% 50V	
	C7805	NCB21HK-103AY	C CAPACITOR	.010MF 10% 50V	
	C7806	NCB21HK-103AY	C CAPACITOR	.010MF 10% 50V	
	C7807	NCB21HK-103AY	C CAPACITOR	.010MF 10% 50V	
	C7808	NCB21HK-103AY	C CAPACITOR	.010MF 10% 50V	
	C7809	NCB21HK-102AY	C CAPACITOR	1000PF 10% 50V	
	C7810	NCB21HK-103AY	C CAPACITOR	.010MF 10% 50V	

BLOCK NO. 04

⚠	REF.	PARTS NO.	PARTS NAME	REMARKS	SUFFIX
	DI701	QLD0042-001	LCD	44PIN	
	D7001	1SS133	SI DIODE	US5V	
⚠	D7011	MTZ8.2JB	DIODE	SHORT HOGO	
⚠	D7012	1SS133	SI DIODE	SHORT HOGO	
	D7031	1SS133	SI DIODE	BUCKUP	
	D7032	1SS133	SI DIODE	CLOCK	
	D7051	1SS133	SI DIODE	RESET	
	D7061	MTZ5.1JC	ZENER DIODE	BUCKUP CONT.	
	D7091	1SS133	SI DIODE	US5V	
	IC701	UPD78064GF-108	IC	SYSTEM MICON	
	IC702	PIC-21043SP	REMOKON SENSOR		
⚠	IC703	KIA78S06P-T	IC	US6V REG	
	K7001	VQZ0107-002	INDUCTOR	ICVSS	
	K7002	VQZ0107-002	INDUCTOR	AVSS	
	K7003	VQZ0107-002	INDUCTOR		
	K7004	VQZ0107-002	INDUCTOR		
	L7002	VQP0033-100Z	INDUCTOR	US5V	
	L7003	VQP0033-470Z	INDUCTOR	AVDD	
	L7005	VQP0018-4R7	INDUCTOR	AVREF	
	Q7001	2SC2668(O)	TRANSISTOR	CLOCK SHIFT	
	Q7002	2SC2668(O)	TRANSISTOR	CLOCK SHIFT	
	Q7031	2SA1037AKT146	CHIP TRANSISTOR	SW5V	
	Q7051	DTC114TKT146	TRANSISTOR	RESET SW	
	Q7061	2SC2412K/R/-X	TRANSISTOR	BACKUP CONT	
	Q7091	2SC2412K/R/-X	TRANSISTOR	POUT DRIVER	
	Q7092	2SA1037AKT146	CHIP TRANSISTOR	STANDBY LED CON	
	Q7601	DTC144TKA-X	TRANSISTOR		
	Q7602	DTC144TKA-X	TRANSISTOR		
	Q7603	2SC2412K/R/-X	TRANSISTOR		
	R7005	NRSA02J-822NY	MG RESISTOR	8.2K 5% 1/10W	
	R7006	NRSA02J-822NY	MG RESISTOR	8.2K 5% 1/10W	
	R7031	NRSA02J-331NY	MG RESISTOR	330 5% 1/10W	
	R7032	NRSA02J-103NY	MG RESISTOR	10K 5% 1/10W	
	R7033	NRSA02J-102NY	MG RESISTOR	1.0K 5% 1/10W	
	R7051	NRSA02J-103NY	MG RESISTOR	10K 5% 1/10W	
	R7052	NRSA02J-103NY	MG RESISTOR	10K 5% 1/10W	
	R7061	NRSA02J-333NY	MG RESISTOR	33K 5% 1/10W	
	R7062	NRSA02J-473NY	MG RESISTOR	47K 5% 1/10W	
	R7063	NRSA02J-104NY	MG RESISTOR	100K 5% 1/10W	
	R7081	NRSA02J-104NY	MG RESISTOR	100K 5% 1/10W	
	R7082	NRSA02J-104NY	MG RESISTOR	100K 5% 1/10W	
	R7083	NRSA02J-104NY	MG RESISTOR	100K 5% 1/10W	
	R7084	NRSA02J-273NY	MG RESISTOR	27K 5% 1/10W	
	R7093	NRSA02J-153NY	MG RESISTOR	15K 5% 1/10W	
	R7095	NRSA02J-333NY	MG RESISTOR	33K 5% 1/10W	
	R7096	NRSA02J-102NY	MG RESISTOR	1.0K 5% 1/10W	
	R7429	NRSA02J-913NY	MG RESISTOR	91K 5% 1/10W	
	R7528	NRSA02J-223NY	MG RESISTOR	22K 5% 1/10W	
	R7529	NRSA02J-473NY	MG RESISTOR	47K 5% 1/10W	
	R7530	NRSA02J-103NY	MG RESISTOR	10K 5% 1/10W	
	R7544	NRSA02J-114NYM	MG RESISTOR	110K 5% 1/10W	
	R7545	NRSA02J-114NYM	MG RESISTOR	110K 5% 1/10W	
	R7602	NRSA02J-102NY	MG RESISTOR	1.0K 5% 1/10W	
	R7614	NRSA02J-103NY	MG RESISTOR	10K 5% 1/10W	
	R7615	NRSA02J-103NY	MG RESISTOR	10K 5% 1/10W	

BLOCK NO. 04

⚠	REF.	PARTS NO.	PARTS NAME	REMARKS	SUFFIX
	R7619	NRSA02J-122NY	MG RESISTOR	1.2K 5% 1/10W	
	R7620	NRSA02J-102NY	MG RESISTOR	1.0K 5% 1/10W	
	R7621	NRSA02J-122NY	MG RESISTOR	1.2K 5% 1/10W	
	R7622	NRSA02J-102NY	MG RESISTOR	1.0K 5% 1/10W	
	R7625	NRSA02J-823NY	MG RESISTOR	82K 5% 1/10W	
	R7628	NRSA02J-823NY	MG RESISTOR	82K 5% 1/10W	
	R7629	NRSA02J-103NY	MG RESISTOR	10K 5% 1/10W	
	R7630	NRSA02J-563NY	MG RESISTOR	56K 5% 1/10W	
	R7631	NRSA02J-104NY	MG RESISTOR	100K 5% 1/10W	
	R7632	NRSA02J-103NY	MG RESISTOR	10K 5% 1/10W	
	R7633	NRSA02J-103NY	MG RESISTOR	10K 5% 1/10W	
	R7634	NRSA02J-103NY	MG RESISTOR	10K 5% 1/10W	
	R7635	NRSA02J-104NY	MG RESISTOR	100K 5% 1/10W	
	R7639	NRSA02J-222NY	MG RESISTOR	2.2K 5% 1/10W	
	R7641	NRSA02J-102NY	MG RESISTOR	1.0K 5% 1/10W	
	R7642	NRSA02J-102NY	MG RESISTOR	1.0K 5% 1/10W	
	R7643	NRSA02J-103NY	MG RESISTOR	10K 5% 1/10W	
	R7644	NRSA02J-683NY	MG RESISTOR	68K 5% 1/10W	
	R7646	NRSA02J-683NY	MG RESISTOR	68K 5% 1/10W	
	R7647	NRSA02J-104NY	MG RESISTOR	100K 5% 1/10W	
	R7648	NRSA02J-394NY	MG RESISTOR	390K 5% 1/10W	
	R7649	NRSA02J-823NY	MG RESISTOR	82K 5% 1/10W	
	R7701	NRSA02J-223NY	MG RESISTOR	22K 5% 1/10W	
	R7702	NRSA02J-103NY	MG RESISTOR	10K 5% 1/10W	
	R7703	NRSA02J-102NY	MG RESISTOR	1.0K 5% 1/10W	
	R7704	NRSA02J-103NY	MG RESISTOR	10K 5% 1/10W	
	R7705	NRSA02J-102NY	MG RESISTOR	1.0K 5% 1/10W	
	R7706	QRD161J-102	C RESISTOR	1.0K 5% 1/4W	
	R7707	QRD161J-102	C RESISTOR	1.0K 5% 1/4W	
	R7711	NRSA02J-222NY	MG RESISTOR	2.2K 5% 1/10W	
	R7712	NRSA02J-102NY	MG RESISTOR	1.0K 5% 1/10W	
	R7713	NRSA02J-222NY	MG RESISTOR	2.2K 5% 1/10W	
	R7715	NRSA02J-222NY	MG RESISTOR	2.2K 5% 1/10W	
	R7716	NRSA02J-472NY	MG RESISTOR	4.7K 5% 1/10W	
	R7717	NRSA02J-472NY	MG RESISTOR	4.7K 5% 1/10W	
	R7718	NRSA02J-222NY	MG RESISTOR	2.2K 5% 1/10W	
	R7719	NRSA02J-102NY	MG RESISTOR	1.0K 5% 1/10W	
	R7720	NRSA02J-102NY	MG RESISTOR	1.0K 5% 1/10W	
	R7721	NRSA02J-102NY	MG RESISTOR	1.0K 5% 1/10W	
	R7722	NRSA02J-102NY	MG RESISTOR	1.0K 5% 1/10W	
	R7723	NRSA02J-222NY	MG RESISTOR	2.2K 5% 1/10W	
	R7724	NRSA02J-222NY	MG RESISTOR	2.2K 5% 1/10W	
	R7725	NRSA02J-222NY	MG RESISTOR	2.2K 5% 1/10W	
	R7726	NRSA02J-222NY	MG RESISTOR	2.2K 5% 1/10W	
	R7728	NRSA02J-222NY	MG RESISTOR	2.2K 5% 1/10W	
	R7729	NRSA02J-222NY	MG RESISTOR	2.2K 5% 1/10W	
	R7730	NRSA02J-222NY	MG RESISTOR	2.2K 5% 1/10W	
	R7731	NRSA02J-222NY	MG RESISTOR	2.2K 5% 1/10W	
	R7732	NRSA02J-222NY	MG RESISTOR	2.2K 5% 1/10W	
	R7733	NRSA02J-222NY	MG RESISTOR	2.2K 5% 1/10W	
	R7734	NRSA02J-222NY	MG RESISTOR	2.2K 5% 1/10W	
	R7735	NRSA02J-2 .2NY	MG RESISTOR	2.2K 5% 1/10W	
	R7738	NRSA02J-222NY	MG RESISTOR	2.2K 5% 1/10W	
	R7739	NRSA02J-222NY	MG RESISTOR	2.2K 5% 1/10W	
	R7741	NRSA02J-222NY	MG RESISTOR	2.2K 5% 1/10W	

BLOCK NO. 04

⚠	REF.	PARTS NO.	PARTS NAME	REMARKS	SUFFIX
	R7742	NRSA02J-222NY	MG RESISTOR	2.2K 5% 1/10W	
	R7743	NRSA02J-222NY	MG RESISTOR	2.2K 5% 1/10W	
	R7744	NRSA02J-563NY	MG RESISTOR	56K 5% 1/10W	
	R7745	NRSA02J-473NY	MG RESISTOR	47K 5% 1/10W	
	R7746	NRSA02J-333NY	MG RESISTOR	33K 5% 1/10W	
	R7747	NRSA02J-222NY	MG RESISTOR	2.2K 5% 1/10W	
	R7748	NRSA02J-153NY	MG RESISTOR	15K 5% 1/10W	
	R7749	NRSA02J-123NY	MG RESISTOR	12K 5% 1/10W	
	R7750	NRSA02J-222NY	MG RESISTOR	2.2K 5% 1/10W	
	R7799	NRSA02J-102NY	MG RESISTOR	1.0K 5% 1/10W	
	WR 1	VWS302-103K3K	FLAT WIRE	LAMP WIRE	
	X7001	QAX0401-001	CRYSTAL	CLOCK	
	X7002	QAX0410-001Z	CERA LOCK	MAIN CLOCK	

■ Tuner Board (B/E/EN)

BLOCK NO. 05

⚠	REF.	PARTS NO.	PARTS NAME	REMARKS	SUFFIX
	C 1	NCB21HK-223AY	C CAPACITOR	.022MF 10% 50V	
	C 2	NCB21HK-103AY	C CAPACITOR	.010MF 10% 50V	
	C 3	NCB21HK-473AY	C CAPACITOR	.047MF 10% 25V	
	C 4	NCB21HK-103AY	C CAPACITOR	.010MF 10% 50V	
	C 5	QEK41CM-106	E CAPACITOR	10MF 20% 16V	
	C 6	NCB21HK-102AY	C CAPACITOR	1000PF 10% 50V	
	C 7	NCS21HJ-102AY	C CAPACITOR	1000PF 5% 50V	
	C 8	NCS21HJ-150AY	C CAPACITOR	15PF 5% 50V	
	C 9	NCB21HK-102AY	C CAPACITOR	1000PF 10% 50V	
	C 11	NCB21HK-103AY	C CAPACITOR	.010MF 10% 50V	
	C 12	NDC21HJ-150X	C CAPACITOR		
	C 13	NCB21HK-473AY	C CAPACITOR	.047MF 10% 25V	
	C 14	NCB21HK-103AY	C CAPACITOR	.010MF 10% 50V	
	C 15	NCB21HK-102AY	C CAPACITOR	1000PF 10% 50V	
	C 16	NCB21HK-102AY	C CAPACITOR	1000PF 10% 50V	
	C 18	NCB21HK-103AY	C CAPACITOR	.010MF 10% 50V	
	C 19	NCB21HK-122AY	C CAPACITOR	1200PF 10% 50V	
	C 21	NCB21HK-473AY	C CAPACITOR	.047MF 10% 25V	
	C 30	QEK41CM-476	E CAPACITOR	47MF 20% 16V	
	C 31	NCS21HJ-390AY	C CAPACITOR	39PF 5% 50V	
	C 32	NCB21HK-102AY	C CAPACITOR	1000PF 10% 50V	
	C 33	QEK61AM-107ZM	E CAPACITOR	100MF 20% 10V	
	C 34	NCS21HJ-150AY	C CAPACITOR	15PF 5% 50V	
	C 35	NCB21HK-102AY	C CAPACITOR	1000PF 10% 50V	
	C 36	QEK41CM-106	E CAPACITOR	10MF 20% 16V	
	C 37	NCB21HK-473AY	C CAPACITOR	.047MF 10% 25V	
	C 39	NCB21HK-473AY	C CAPACITOR	.047MF 10% 25V	
	C 40	NCB21HK-103AY	C CAPACITOR	.010MF 10% 50V	
	C 41	QEK41HM-104	E CAPACITOR	.10MF 20% 50V	
	C 42	QEK41HM-474	E CAPACITOR	.47MF 20% 50V	
	C 43	QEK61HM-335ZN	E CAPACITOR	3.3MF 20% 50V	
	C 44	NCS21HJ-221AY	C CAPACITOR	220PF 5% 50V	
	C 45	QEK41CM-106	E CAPACITOR	10MF 20% 16V	
	C 46	NCB21HK-223AY	C CAPACITOR	.022MF 10% 50V	
	C 47	NCB21HK-103AY	C CAPACITOR	.010MF 10% 50V	
	C 49	NCB21HK-183AY	C CAPACITOR	.018MF 10% 50V	
	C 50	NCB21HK-183AY	C CAPACITOR	.018MF 10% 50V	
	C 51	QEK41HM-105	E CAPACITOR	1.0MF 20% 50V	
	C 52	QEK41HM-105	E CAPACITOR	1.0MF 20% 50V	
	C 53	NCB21HK-681AY	C CAPACITOR	680PF 10% 50V	
	C 55	NCS21HJ-120AY	C CAPACITOR	12PF 5% 50V	
	C 60	QEK61AM-107ZM	E CAPACITOR	100MF 20% 10V	
	C 61	NCS21HJ-120AY	C CAPACITOR	12PF 5% 50V	
	C 62	NCS21HJ-120AY	C CAPACITOR	12PF 5% 50V	
	C 63	NCB21HK-473AY	C CAPACITOR	.047MF 10% 25V	
	C 65	NCB21HK-102AY	C CAPACITOR	1000PF 10% 50V	
	C 66	NCS21HJ-151X	C CAPACITOR	150PF 5% 50V	
	C 67	NCS21HJ-151X	C CAPACITOR	150PF 5% 50V	
	C 68	NCS21HJ-101AY	C CAPACITOR	100PF 5% 50V	
	C 69	QEK41HM-225	E CAPACITOR	2.2MF 20% 50V	
	C 70	NCB21HK-392AY	C CAPACITOR	3900PF 10% 50V	
	C 71	QEK61HM-335ZN	E CAPACITOR	3.3MF 20% 50V	
	C 72	NCB21HK-102AY	C CAPACITOR	1000PF 10% 50V	
	C 91	NCB21HK-103AY	C CAPACITOR	.010MF 10% 50V	
	C 92	NCB21HK-103AY	C CAPACITOR	.010MF 10% 50V	

BLOCK NO. 05

⚠	REF.	PARTS NO.	PARTS NAME	REMARKS	SUFFIX
	C 93	NCB21HK-103AY	C CAPACITOR	.010MF 10% 50V	
	C 94	NCB21HK-102AY	C CAPACITOR	1000PF 10% 50V	
	CF 1	VCF2M3B-104	C FILTER	FM IF	
	CF 2	VCF2S3B-102	C FILTER	FM IF	
	CF 3	VCF1Z2Z-115Z	C FILTER		
	CF 4	QAX0409-001	CERA LOCK		
	CN 1	VMC0163-R10	CONNECTOR		
	D 1	1SS133	SI DIODE		
	D 2	1SS133	SI DIODE		
	D 3	1SS133	SI DIODE		
	D 4	1SS133	SI DIODE		
	IC 1	TA2057N	IC		
	IC 2	LC72136N	IC		
	J 1	EMB41YV-302K	ANT TERMINAL	AM/FM ANT	
	L 1	VQZ0098-102	COIL BLOCK	MW/LW RF/OSC	
	L 4	VQP0018-221	INDUCTOR		
	L 10	VQZ0069-002	TRAP COIL	114KHZ TRAP	
	L 11	VQP0018-2R7	INDUCTOR		
	Q 1	2SC2668(O)	TRANSISTOR		
	Q 2	DTA114YKA-X	TRANSISTOR		
	Q 3	KTC3199(GL)-T	TRANSISTOR		
	Q 4	KTC3199(GL)-T	TRANSISTOR		
	Q 6	DTA114YKA-X	TRANSISTOR		
	Q 7	2SA1037K(R)-X	TRANSISTOR		
	Q 8	2SA1037K(R)-X	TRANSISTOR		
	R 1	NRSA02J-102NY	MG RESISTOR	1.0K 5% 1/10W	
	R 2	NRSA02J-820NY	MG RESISTOR	82 5% 1/10W	
	R 3	NRSA02J-560NY	MG RESISTOR	56 5% 1/10W	
	R 10	NRSA02J-152NY	MG RESISTOR	1.5K 5% 1/10W	
	R 12	NRSA02J-102NY	MG RESISTOR	1.0K 5% 1/10W	
	R 13	NRSA02J-104NY	MG RESISTOR	100K 5% 1/10W	
	R 15	NRSA02J-103NY	MG RESISTOR	10K 5% 1/10W	
	R 16	NRSA02J-103NY	MG RESISTOR	10K 5% 1/10W	
	R 20	NRSA02J-331NY	MG RESISTOR	330 5% 1/10W	
	R 21	NRSA02J-224NY	MG RESISTOR	220K 5% 1/10W	
	R 22	NRSA02J-331NY	MG RESISTOR	330 5% 1/10W	
	R 23	NRSA02J-100NY	MG RESISTOR	10 5% 1/10W	
	R 24	NRSA02J-271NY	MG RESISTOR	270 5% 1/10W	
	R 25	NRSA02J-473NY	MG RESISTOR	47K 5% 1/10W	
	R 26	NRSA02J-153NY	MG RESISTOR	15K 5% 1/10W	
	R 27	NRSA02J-223NY	MG RESISTOR	22K 5% 1/10W	
	R 29	NRSA02J-473NY	MG RESISTOR	47K 5% 1/10W	
	R 30	NRSA02J-103NY	MG RESISTOR	10K 5% 1/10W	
	R 31	NRSA02J-103NY	MG RESISTOR	10K 5% 1/10W	
	R 34	NRSA02J-333NY	MG RESISTOR	33K 5% 1/10W	
	R 35	NRSA02J-333NY	MG RESISTOR	33K 5% 1/10W	
	R 36	NRSA02J-103NY	MG RESISTOR	10K 5% 1/10W	
	R 37	NRSA02J-472NY	MG RESISTOR	4.7K 5% 1/10W	
	R 38	NRSA02J-392NY	MG RESISTOR	3.9K 5% 1/10W	
	R 39	NRSA02J-392NY	MG RESISTOR	3.9K 5% 1/10W	
	R 42	NRSA02J-102NY	MG RESISTOR	1.0K 5% 1/10W	
	R 43	NRSA02J-102NY	MG RESISTOR	1.0K 5% 1/10W	
	R 44	NRSA02J-102NY	MG RESISTOR	1.0K 5% 1/10W	
	R 45	NRSA02J-102NY	MG RESISTOR	1.0K 5% 1/10W	
	R 46	NRSA02J-473NY	MG RESISTOR	47K 5% 1/10W	

BLOCK NO. 05

⚠	REF.	PARTS NO.	PARTS NAME	REMARKS	SUFFIX
	R 48	NRSA02J-102NY	MG RESISTOR	1.0K 5% 1/10W	
	R 52	NRSA02J-472NY	MG RESISTOR	4.7K 5% 1/10W	
	R 54	NRSA02J-472NY	MG RESISTOR	4.7K 5% 1/10W	
	R 55	NRSA02J-182NY	MG RESISTOR	1.8K 5% 1/10W	
	R 56	NRSA02J-332NY	MG RESISTOR	3.3K 5% 1/10W	
	R 57	NRSA02J-102NY	MG RESISTOR	1.0K 5% 1/10W	
	R 60	NRSA02J-102NY	MG RESISTOR	1.0K 5% 1/10W	
	R 61	NRSA02J-102NY	MG RESISTOR	1.0K 5% 1/10W	
	R 65	NRSA02J-222NY	MG RESISTOR	2.2K 5% 1/10W	
	R 66	NRSA02J-222NY	MG RESISTOR	2.2K 5% 1/10W	
	R 68	NRSA02J-223NY	MG RESISTOR	22K 5% 1/10W	
	R 69	NRSA02J-103NY	MG RESISTOR	10K 5% 1/10W	
	R 74	NRSA02J-332NY	MG RESISTOR	3.3K 5% 1/10W	
	R 75	NRSA02J-103NY	MG RESISTOR	10K 5% 1/10W	
	T 1	VQT7A21-113	IFT		
	TU 1	QAU0034-001	FRONT END	FM TU	
	X 1	QAX0402-001	CRYSTAL		

■ Tuner Board (EE)

BLOCK NO. 06

⚠	REF.	PARTS NO.	PARTS NAME	REMARKS	SUFFIX
	C 1	NCB21HK-223AY	C CAPACITOR	.022MF 10% 50V	
	C 2	NCB21HK-103AY	C CAPACITOR	.010MF 10% 50V	
	C 3	NCB21HK-473AY	C CAPACITOR	.047MF 10% 25V	
	C 4	NCB21HK-103AY	C CAPACITOR	.010MF 10% 50V	
	C 5	QEK41CM-106	E CAPACITOR	10MF 20% 16V	
	C 6	NCB21HK-102AY	C CAPACITOR	1000PF 10% 50V	
	C 7	NCS21HJ-102AY	C CAPACITOR	1000PF 5% 50V	
	C 8	NCS21HJ-150AY	C CAPACITOR	15PF 5% 50V	
	C 9	NCB21HK-102AY	C CAPACITOR	1000PF 10% 50V	
	C 11	NCB21HK-103AY	C CAPACITOR	.010MF 10% 50V	
	C 12	NDC21HJ-150X	C CAPACITOR		
	C 13	NCB21HK-473AY	C CAPACITOR	.047MF 10% 25V	
	C 14	NCB21HK-103AY	C CAPACITOR	.010MF 10% 50V	
	C 15	NCB21HK-102AY	C CAPACITOR	1000PF 10% 50V	
	C 16	NCB21HK-102AY	C CAPACITOR	1000PF 10% 50V	
	C 18	NCB21HK-103AY	C CAPACITOR	.010MF 10% 50V	
	C 19	NCB21HK-122AY	C CAPACITOR	1200PF 10% 50V	
	C 21	NCB21HK-473AY	C CAPACITOR	.047MF 10% 25V	
	C 30	QEK41CM-476	E CAPACITOR	47MF 20% 16V	
	C 31	NCS21HJ-390AY	C CAPACITOR	39PF 5% 50V	
	C 32	NCB21HK-102AY	C CAPACITOR	1000PF 10% 50V	
	C 33	QEK61AM-107ZM	E CAPACITOR	100MF 20% 10V	
	C 34	NCS21HJ-150AY	C CAPACITOR	15PF 5% 50V	
	C 35	NCB21HK-102AY	C CAPACITOR	1000PF 10% 50V	
	C 36	QEK41CM-106	E CAPACITOR	10MF 20% 16V	
	C 37	NCB21HK-473AY	C CAPACITOR	.047MF 10% 25V	
	C 39	NCB21HK-473AY	C CAPACITOR	.047MF 10% 25V	
	C 40	NCB21HK-103AY	C CAPACITOR	.010MF 10% 50V	
	C 41	QEK41HM-104	E CAPACITOR	.10MF 20% 50V	
	C 42	QEK41HM-474	E CAPACITOR	.47MF 20% 50V	
	C 43	QEK61HM-335ZN	E CAPACITOR	3.3MF 20% 50V	
	C 44	NCS21HJ-221AY	C CAPACITOR	220PF 5% 50V	
	C 45	QEK41CM-106	E CAPACITOR	10MF 20% 16V	
	C 46	NCB21HK-223AY	C CAPACITOR	.022MF 10% 50V	
	C 47	NCB21HK-103AY	C CAPACITOR	.010MF 10% 50V	
	C 49	NCB21HK-183AY	C CAPACITOR	.018MF 10% 50V	
	C 50	NCB21HK-183AY	C CAPACITOR	.018MF 10% 50V	
	C 51	QEK41HM-105	E CAPACITOR	1.0MF 20% 50V	
	C 52	QEK41HM-105	E CAPACITOR	1.0MF 20% 50V	
	C 53	NCB21HK-681AY	C CAPACITOR	680PF 10% 50V	
	C 55	NCS21HJ-120AY	C CAPACITOR	12PF 5% 50V	
	C 60	QEK61AM-107ZM	E CAPACITOR	100MF 20% 10V	
	C 61	NCS21HJ-120AY	C CAPACITOR	12PF 5% 50V	
	C 62	NCS21HJ-120AY	C CAPACITOR	12PF 5% 50V	
	C 63	NCB21HK-473AY	C CAPACITOR	.047MF 10% 25V	
	C 65	NCB21HK-102AY	C CAPACITOR	1000PF 10% 50V	
	C 66	NCS21HJ-151X	C CAPACITOR	150PF 5% 50V	
	C 67	NCS21HJ-151X	C CAPACITOR	150PF 5% 50V	
	C 68	NCS21HJ-101AY	C CAPACITOR	100PF 5% 50V	
	C 69	QEK41HM-225	E CAPACITOR	2.2MF 20% 50V	
	C 70	NCB21HK-392AY	C CAPACITOR	3900PF 10% 50V	
	C 71	QEK61HM-335ZN	E CAPACITOR	3.3MF 20% 50V	
	C 72	NCB21HK-102AY	C CAPACITOR	1000PF 10% 50V	
	C 91	NCB21HK-103AY	C CAPACITOR	.010MF 10% 50V	
	C 92	NCB21HK-103AY	C CAPACITOR	.010MF 10% 50V	

BLOCK NO. 06

⚠	REF.	PARTS NO.	PARTS NAME	REMARKS	SUFFIX
	C 93	NCB21HK-103AY	C CAPACITOR	.010MF 10% 50V	
	C 94	NCB21HK-102AY	C CAPACITOR	1000PF 10% 50V	
	CF 1	QAX0403-001	C FILTER	FM IF	
	CF 2	QAX0403-001	C FILTER	FM IF	
	CF 3	VCF1Z2Z-115Z	C FILTER		
	CF 4	QAX0409-001	CERA LOCK		
	CN 1	VMC0163-R10	CONNECTOR		
	D 1	1SS133	SI DIODE		
	D 2	1SS133	SI DIODE		
	D 3	1SS133	SI DIODE		
	D 4	1SS133	SI DIODE		
	IC 1	TA2057N	IC		
	IC 2	LC72136N	IC		
	J 1	EMB41YV-302K	ANT TERMINAL	AM/FM ANT	
	L 1	VQZ0098-102	COIL BLOCK	MW/LW RF/OSC	
	L 4	VQP0018-221	INDUCTOR		
	L 11	VQP0018-2R7	INDUCTOR		
	Q 1	2SC2668(O)	TRANSISTOR		
	Q 2	DTA114YKA-X	TRANSISTOR		
	Q 3	KTC3199(GL)-T	TRANSISTOR		
	Q 4	KTC3199(GL)-T	TRANSISTOR		
	Q 6	DTA114YKA-X	TRANSISTOR		
	Q 7	2SA1037K(R)-X	TRANSISTOR		
	Q 8	2SA1037K(R)-X	TRANSISTOR		
	R 1	NRSA02J-102NY	MG RESISTOR	1.0K 5% 1/10W	
	R 2	NRSA02J-820NY	MG RESISTOR	82 5% 1/10W	
	R 3	NRSA02J-560NY	MG RESISTOR	56 5% 1/10W	
	R 10	NRSA02J-152NY	MG RESISTOR	1.5K 5% 1/10W	
	R 12	NRSA02J-102NY	MG RESISTOR	1.0K 5% 1/10W	
	R 13	NRSA02J-104NY	MG RESISTOR	100K 5% 1/10W	
	R 15	NRSA02J-103NY	MG RESISTOR	10K 5% 1/10W	
	R 16	NRSA02J-103NY	MG RESISTOR	10K 5% 1/10W	
	R 20	NRSA02J-331NY	MG RESISTOR	330 5% 1/10W	
	R 21	NRSA02J-224NY	MG RESISTOR	220K 5% 1/10W	
	R 22	NRSA02J-331NY	MG RESISTOR	330 5% 1/10W	
	R 23	NRSA02J-100NY	MG RESISTOR	10 5% 1/10W	
	R 24	NRSA02J-271NY	MG RESISTOR	270 5% 1/10W	
	R 25	NRSA02J-473NY	MG RESISTOR	47K 5% 1/10W	
	R 26	NRSA02J-153NY	MG RESISTOR	15K 5% 1/10W	
	R 27	NRSA02J-223NY	MG RESISTOR	22K 5% 1/10W	
	R 29	NRSA02J-473NY	MG RESISTOR	47K 5% 1/10W	
	R 30	NRSA02J-103NY	MG RESISTOR	10K 5% 1/10W	
	R 31	NRSA02J-103NY	MG RESISTOR	10K 5% 1/10W	
	R 34	NRSA02J-333NY	MG RESISTOR	33K 5% 1/10W	
	R 35	NRSA02J-333NY	MG RESISTOR	33K 5% 1/10W	
	R 36	NRSA02J-103NY	MG RESISTOR	10K 5% 1/10W	
	R 37	NRSA02J-472NY	MG RESISTOR	4.7K 5% 1/10W	
	R 38	NRSA02J-392NY	MG RESISTOR	3.9K 5% 1/10W	
	R 39	NRSA02J-392NY	MG RESISTOR	3.9K 5% 1/10W	
	R 42	NRSA02J-102NY	MG RESISTOR	1.0K 5% 1/10W	
	R 43	NRSA02J-102NY	MG RESISTOR	1.0K 5% 1/10W	
	R 44	NRSA02J-102NY	MG RESISTOR	1.0K 5% 1/10W	
	R 45	NRSA02J-102NY	MG RESISTOR	1.0K 5% 1/10W	
	R 46	NRSA02J-473NY	MG RESISTOR	47K 5% 1/10W	
	R 48	NRSA02J-102NY	MG RESISTOR	1.0K 5% 1/10W	

BLOCK NO. 06

⚠	REF.	PARTS NO.	PARTS NAME	REMARKS	SUFFIX
	R 52	NRSA02J-472NY	MG RESISTOR	4.7K 5% 1/10W	
	R 54	NRSA02J-472NY	MG RESISTOR	4.7K 5% 1/10W	
	R 55	NRSA02J-182NY	MG RESISTOR	1.8K 5% 1/10W	
	R 56	NRSA02J-332NY	MG RESISTOR	3.3K 5% 1/10W	
	R 57	NRSA02J-102NY	MG RESISTOR	1.0K 5% 1/10W	
	R 60	NRSA02J-102NY	MG RESISTOR	1.0K 5% 1/10W	
	R 61	NRSA02J-102NY	MG RESISTOR	1.0K 5% 1/10W	
	R 65	NRSA02J-222NY	MG RESISTOR	2.2K 5% 1/10W	
	R 66	NRSA02J-222NY	MG RESISTOR	2.2K 5% 1/10W	
	R 68	NRSA02J-223NY	MG RESISTOR	22K 5% 1/10W	
	R 69	NRSA02J-103NY	MG RESISTOR	10K 5% 1/10W	
	R 74	NRSA02J-332NY	MG RESISTOR	3.3K 5% 1/10W	
	R 75	NRSA02J-103NY	MG RESISTOR	10K 5% 1/10W	
	T 1	VQT7A21-113	IFT		
	TU 1	QAU0036-001	FRONT END	FM TU	
	X 1	QAX0402-001	CRYSTAL		

■ Tuner Board (UB/UF/US/UX/U)

BLOCK NO. 07

⚠	REF.	PARTS NO.	PARTS NAME	REMARKS	SUFFIX
	C 1	NCB21HK-223AY	C CAPACITOR	.022MF 10% 50V	
	C 3	NCB21HK-473AY	C CAPACITOR	.047MF 10% 25V	
	C 4	NCB21HK-103AY	C CAPACITOR	.010MF 10% 50V	
	C 5	QEK41CM-106	E CAPACITOR	10MF 20% 16V	
	C 8	NCB21HK-103AY	C CAPACITOR	.010MF 10% 50V	
	C 9	NCB21HK-102AY	C CAPACITOR	1000PF 10% 50V	
	C 21	NCB21HK-473AY	C CAPACITOR	.047MF 10% 25V	
	C 23	NCS21HC-3R0AY	C CAPACITOR	3.0PF 5% 50V	
	C 30	QEK41CM-476	E CAPACITOR	47MF 20% 16V	
	C 31	NCS21HC-2R0AY	C CAPACITOR	2.0PF 5% 50V	
	C 32	NCB21HK-102AY	C CAPACITOR	1000PF 10% 50V	
	C 33	QEK61AM-107ZM	E CAPACITOR	100MF 20% 10V	
	C 34	NCS21HJ-150AY	C CAPACITOR	15PF 5% 50V	
	C 35	NCB21HK-102AY	C CAPACITOR	1000PF 10% 50V	
	C 36	QEK41CM-106	E CAPACITOR	10MF 20% 16V	
	C 37	NCB21HK-473AY	C CAPACITOR	.047MF 10% 25V	
	C 39	NCB21HK-473AY	C CAPACITOR	.047MF 10% 25V	
	C 40	NCB21HK-103AY	C CAPACITOR	.010MF 10% 50V	
	C 41	QEK41HM-104	E CAPACITOR	.10MF 20% 50V	
	C 42	QEK41HM-474	E CAPACITOR	.47MF 20% 50V	
	C 44	NCS21HJ-221AY	C CAPACITOR	220PF 5% 50V	
	C 45	QEK61HM-335ZN	E CAPACITOR	3.3MF 20% 50V	
	C 46	NCB21HK-223AY	C CAPACITOR	.022MF 10% 50V	
	C 47	NCB21HK-103AY	C CAPACITOR	.010MF 10% 50V	
	C 49	NCB21HK-153AY	C CAPACITOR	.015MF 10% 50V	
	C 50	NCB21HK-153AY	C CAPACITOR	.015MF 10% 50V	
	C 51	QEK41HM-105	E CAPACITOR	1.0MF 20% 50V	
	C 52	QEK41HM-105	E CAPACITOR	1.0MF 20% 50V	
	C 55	NCS21HJ-120AY	C CAPACITOR	12PF 5% 50V	
	C 60	QEK61AM-107ZM	E CAPACITOR	100MF 20% 10V	
	C 61	NCS21HJ-120AY	C CAPACITOR	12PF 5% 50V	
	C 62	NCS21HJ-120AY	C CAPACITOR	12PF 5% 50V	
	C 63	NCB21HK-473AY	C CAPACITOR	.047MF 10% 25V	
	C 65	NCB21HK-102AY	C CAPACITOR	1000PF 10% 50V	
	C 66	NCS21HJ-151X	C CAPACITOR	150PF 5% 50V	
	C 67	NCS21HJ-151X	C CAPACITOR	150PF 5% 50V	
	C 68	NCS21HJ-151X	C CAPACITOR	150PF 5% 50V	
	C 69	QEK41HM-225	E CAPACITOR	2.2MF 20% 50V	
	C 70	NCB21HK-392AY	C CAPACITOR	3900PF 10% 50V	
	C 71	QEK61HM-335ZN	E CAPACITOR	3.3MF 20% 50V	
	C 72	NCB21HK-102AY	C CAPACITOR	1000PF 10% 50V	
	C 80	NCS21HJ-8R0AY	C CAPACITOR	8.0PF 5% 50V	
	C 81	NCB21HK-122AY	C CAPACITOR	1200PF 10% 50V	
	C 82	NCB21HK-473AY	C CAPACITOR	.047MF 10% 25V	
	C 83	NCB21HK-103AY	C CAPACITOR	.010MF 10% 50V	
	C 84	NCB21HK-103AY	C CAPACITOR	.010MF 10% 50V	
	C 85	NCB21HK-102AY	C CAPACITOR	1000PF 10% 50V	
	C 86	NCB21HK-102AY	C CAPACITOR	1000PF 10% 50V	
	C 90	NCB21HK-682AY	C CAPACITOR	6800PF 10% 50V	
	C 91	NCB21HK-473AY	C CAPACITOR	.047MF 10% 25V	
	C 92	NCS21HJ-101AY	C CAPACITOR	100PF 5% 50V	
	C 93	NCS21HJ-100AY	C CAPACITOR	10PF 5% 50V	
	C 94	NCS21HJ-120AY	C CAPACITOR	12PF 5% 50V	
	C 95	NCS21HJ-102AY	C CAPACITOR	1000PF 5% 50V	
	C 96	NCS21HJ-8R0AY	C CAPACITOR	8.0PF 5% 50V	

BLOCK NO. 07

⚠	REF.	PARTS NO.	PARTS NAME	REMARKS	SUFFIX
	C 97	NCS21HC-4R0AY	C CAPACITOR	4.0PF 5% 50V	
	C 99	NCB21CK-104X	C CAPACITOR	.10MF 10% 16V	
	CF 1	VCF2L3B-108Z	C FILTER	FM IF	
	CF 2	VCF2L3B-108Z	C FILTER	FM IF	
	CF 3	VCF1Z2Z-115Z	C FILTER		
	CF 4	QAX0409-001	CERA LOCK		
	CN 1	VMC0163-R10	CONNECTOR		
	D 1	1SS133	SI DIODE		
	D 2	1SS133	SI DIODE		
	D 3	1SS133	SI DIODE		
	D 4	1SS133	SI DIODE		
	D 5	1SS133	SI DIODE		
	D 6	1SS133	SI DIODE		
	D 20	SVC344-AA	VARI CAP		
	D 21	SVC344-AA	VARI CAP		
	IC 1	TA2057N	IC		
	IC 2	LC72136N	IC		
	J 1	FMMB10YV-401K	ANT TERMINAL	AM/FM ANT	
	L 1	VQZ0098-202	COIL BLOCK	MW RF/OSC	
	L 4	VQP0018-221	INDUCTOR		
	L 5	VQP0018-220	INDUCTOR		
	L 6	VQS7U01-801	OSC COIL	SW1 OSC	
	L 7	VQR7002-501	RF COIL	SW2 RF	
	L 8	VQR7002-501	RF COIL	SW2 OSC	
	L 10	VO3047-6L	COIL		
	L 11	VO3047-6L	COIL		
	L 12	VQP0018-221	INDUCTOR		
	Q 1	2SC2668(O)	TRANSISTOR		
	Q 2	DTA114TKAT146	TRANSISTOR	SW1 SWITCH	
	Q 3	DTA114TKAT146	TRANSISTOR	MW SWITCH	
	Q 6	DTA114YKA-X	TRANSISTOR		
	Q 7	2SA1037K(R)-X	TRANSISTOR		
	Q 8	2SA1037K(R)-X	TRANSISTOR		
	Q 12	2SD2144S(VW)	TRANSISTOR	MW SWITCH	
	Q 13	2SC2668(O)	TRANSISTOR	MW SWITCH	
	Q 14	2SA1037K(R)-X	TRANSISTOR	MW SWITCH	
	Q 15	2SA1037K(R)-X	TRANSISTOR	MW SWITCH	
	Q 21	DTA114TKAT146	TRANSISTOR	SW2 SWITCH	
	Q 22	2SC2668(O)	TRANSISTOR	SW2 SWITCH	
	Q 24	2SD2144S(VW)	TRANSISTOR	SW1 SWITCH	
	Q 25	2SA1037K(R)-X	TRANSISTOR	SW1 SWITCH	
	Q 26	DTA114TKAT146	TRANSISTOR	SW1 SWITCH	
	Q 27	2SC2668(O)	TRANSISTOR	SW1 SWITCH	
	Q 28	2SA1037K(R)-X	TRANSISTOR	SW2 SWITCH	
	R 1	NRSA02J-102NY	MG RESISTOR	1.0K 5% 1/10W	
	R 2	NRSA02J-821NY	MG RESISTOR	820 5% 1/10W	
	R 11	NRSA02J-104NY	MG RESISTOR	100K 5% 1/10W	
	R 12	NRSA02J-222NY	MG RESISTOR	2.2K 5% 1/10W	
	R 13	NRSA02J-103NY	MG RESISTOR	10K 5% 1/10W	
	R 14	NRSA02J-103NY	MG RESISTOR	10K 5% 1/10W	
	R 15	NRSA02J-103NY	MG RESISTOR	10K 5% 1/10W	
	R 18	NRSA02J-102NY	MG RESISTOR	1.0K 5% 1/10W	
	R 20	NRSA02J-331NY	MG RESISTOR	330 5% 1/10W	
	R 21	NRSA02J-224NY	MG RESISTOR	220K 5% 1/10W	
	R 22	NRSA02J-331NY	MG RESISTOR	330 5% 1/10W	

BLOCK NO. 07

⚠	REF.	PARTS NO.	PARTS NAME	REMARKS	SUFFIX
	R 23	NRSA02J-270NY	MG RESISTOR	27 5% 1/10W	
	R 24	NRSA02J-271NY	MG RESISTOR	270 5% 1/10W	
	R 25	NRSA02J-473NY	MG RESISTOR	47K 5% 1/10W	
	R 27	NRSA02J-223NY	MG RESISTOR	22K 5% 1/10W	
	R 28	NRSA02J-560NY	MG RESISTOR	56 5% 1/10W	
	R 29	NRSA02J-473NY	MG RESISTOR	47K 5% 1/10W	
	R 30	NRSA02J-103NY	MG RESISTOR	10K 5% 1/10W	
	R 31	NRSA02J-103NY	MG RESISTOR	10K 5% 1/10W	
	R 32	NRSA02J-473NY	MG RESISTOR	47K 5% 1/10W	
	R 34	NRSA02J-333NY	MG RESISTOR	33K 5% 1/10W	
	R 35	NRSA02J-333NY	MG RESISTOR	33K 5% 1/10W	
	R 36	NRSA02J-103NY	MG RESISTOR	10K 5% 1/10W	
	R 37	NRSA02J-472NY	MG RESISTOR	4.7K 5% 1/10W	
	R 38	NRSA02J-392NY	MG RESISTOR	3.9K 5% 1/10W	
	R 39	NRSA02J-392NY	MG RESISTOR	3.9K 5% 1/10W	
	R 42	NRSA02J-102NY	MG RESISTOR	1.0K 5% 1/10W	
	R 43	NRSA02J-102NY	MG RESISTOR	1.0K 5% 1/10W	
	R 44	NRSA02J-102NY	MG RESISTOR	1.0K 5% 1/10W	
	R 45	NRSA02J-102NY	MG RESISTOR	1.0K 5% 1/10W	
	R 46	NRSA02J-473NY	MG RESISTOR	47K 5% 1/10W	
	R 48	NRSA02J-102NY	MG RESISTOR	1.0K 5% 1/10W	
	R 52	NRSA02J-472NY	MG RESISTOR	4.7K 5% 1/10W	
	R 54	NRSA02J-472NY	MG RESISTOR	4.7K 5% 1/10W	
	R 55	NRSA02J-182NY	MG RESISTOR	1.8K 5% 1/10W	
	R 56	NRSA02J-332NY	MG RESISTOR	3.3K 5% 1/10W	
	R 57	NRSA02J-102NY	MG RESISTOR	1.0K 5% 1/10W	
	R 62	NRSA02J-102NY	MG RESISTOR	1.0K 5% 1/10W	
	R 63	NRSA02J-103NY	MG RESISTOR	10K 5% 1/10W	
	R 65	NRSA02J-222NY	MG RESISTOR	2.2K 5% 1/10W	
	R 66	NRSA02J-222NY	MG RESISTOR	2.2K 5% 1/10W	
	R 68	NRSA02J-223NY	MG RESISTOR	22K 5% 1/10W	
	R 69	NRSA02J-103NY	MG RESISTOR	10K 5% 1/10W	
	R 81	NRSA02J-104NY	MG RESISTOR	100K 5% 1/10W	
	R 82	NRSA02J-104NY	MG RESISTOR	100K 5% 1/10W	
	R 83	NRSA02J-222NY	MG RESISTOR	2.2K 5% 1/10W	
	R 84	NRSA02J-223NY	MG RESISTOR	22K 5% 1/10W	
	R 85	NRSA02J-103NY	MG RESISTOR	10K 5% 1/10W	
	R 86	NRSA02J-102NY	MG RESISTOR	1.0K 5% 1/10W	
	R 90	NRSA02J-332NY	MG RESISTOR	3.3K 5% 1/10W	
	R 91	NRSA02J-104NY	MG RESISTOR	100K 5% 1/10W	
	R 92	NRSA02J-102NY	MG RESISTOR	1.0K 5% 1/10W	
	R 96	NRSA02J-102NY	MG RESISTOR	1.0K 5% 1/10W	
	R 97	NRSA02J-104NY	MG RESISTOR	100K 5% 1/10W	
	R 98	NRSA02J-103NY	MG RESISTOR	10K 5% 1/10W	
	T 1	VQT7A21-113	IFT		
	TU 1	QAU0037-001	FRONT END	FM TU	
	X 1	QAX0402-001	CRYSTAL		

■ CD Servo Control Board

BLOCK NO. 08

⚠	REF.	PARTS NO.	PARTS NAME	REMARKS	SUFFIX
	C 604	QEK61AM-107ZM	E CAPACITOR	100MF 20% 10V	
	C 605	QET41EM-106	E CAPACITOR	10MF 20% 25V	
	C 606	QCGB1HK-102	C CAPACITOR	1000PF 10% 50V	
	C 607	QCGB1HK-102	C CAPACITOR	1000PF 10% 50V	
	C 608	QET41HM-105	E CAPACITOR	1.0MF 20% 50V	
	C 609	QCBB1HK-101Y	C CAPACITOR	100PF 10% 50V	
	C 610	QFLC1HJ-273ZM	M CAPACITOR	.027MF 5% 50V	
	C 611	QCXB1CM-222Y	C CAPACITOR	2200PF 20% 16V	
	C 612	QCVB1CN-103Y	C CAPACITOR	.010MF 30% 16V	
	C 613	QCBB1HK-331Y	C CAPACITOR	330PF 10% 50V	
	C 614	QFLC1HJ-104ZM	M CAPACITOR	.10MF 5% 50V	
	C 615	QCFB1HZ-223	C CAPACITOR	.022MF +80:-20% 50V	
	C 616	QCFB1HZ-223	C CAPACITOR	.022MF +80:-20% 50V	
	C 617	QCFB1HZ-223	C CAPACITOR	.022MF +80:-20% 50V	
	C 618	QCXB1CM-222Y	C CAPACITOR	2200PF 20% 16V	
	C 619	QCBB1HK-271Y	C CAPACITOR	270PF 10% 50V	
	C 620	QCS11HJ-470	C CAPACITOR	47PF 5% 50V	
	C 621	QCBB1HK-821Y	C CAPACITOR	820PF 10% 50V	
	C 622	QET41AM-476	E CAPACITOR	47MF 20% 10V	
	C 623	QFLC1HJ-104ZM	M CAPACITOR	.10MF 5% 50V	
	C 628	QCC11EM-473V	C CAPACITOR	.047MF 20% 25V	
	C 629	QET41AM-107	E CAPACITOR	100MF 20% 10V	
	C 631	QET41AM-477	E CAPACITOR	470MF 20% 10V	
	C 632	QEK61AM-107ZM	E CAPACITOR	100MF 20% 10V	
	C 651	QCS11HJ-120	C CAPACITOR	12PF 5% 50V	
	C 652	QCS11HJ-150	C CAPACITOR	15PF 5% 50V	
	C 653	QCFB1HZ-223	C CAPACITOR	.022MF +80:-20% 50V	
	C 655	QCC11EM-473V	C CAPACITOR	.047MF 20% 25V	
	C 661	QCBB1HK-471Y	C CAPACITOR	470PF 10% 50V	
	C 662	QCFB1HZ-223	C CAPACITOR	.022MF +80:-20% 50V	
	C 663	QFLC1HJ-223ZM	M CAPACITOR	.022MF 5% 50V	
	C 664	QCFB1HZ-223	C CAPACITOR	.022MF +80:-20% 50V	
	C 665	QFV41HJ-104ZM	TF CAPACITOR	.10MF 5% 50V	
	C 671	QCXB1CM-152Y	C CAPACITOR	1500PF 20% 16V	
	C 672	QCXB1CM-152Y	C CAPACITOR	1500PF 20% 16V	
	C 673	QTE1C05-227	E CAPACITOR		
	C 674	QCFB1HZ-223	C CAPACITOR	.022MF +80:-20% 50V	
	C 675	QCGB1HK-102	C CAPACITOR	AG-DG	
	C 676	QCGB1HK-102	C CAPACITOR	AG-DG	
	C 691	QCBB1HK-151Y	C CAPACITOR	DENGEN NOISE	
	C 692	QCBB1HK-151Y	C CAPACITOR	DENGEN NOISE	
	C 693	QCBB1HK-151Y	C CAPACITOR	DENGEN NOISE	
	C 698	QCGB1HK-102	C CAPACITOR	1000PF 10% 50V	
	CN	AT-Y-6-06-PH-06	AT-PH CONN	TO MOTOR	
	CN601	QGF1008F1-15	21-41 CONNECTOR	TO RF	
	CN603	QGF1205F1-07	CONNECTOR	TO AUDIO	
	CN604	VMC0163-R11	CONNECTOR	TO MICON	
	CN605	VMC0041-003	CONNECTOR	TO DIGITAL OUT	
	D 661	1SS133	SI DIODE		
	IC601	AN8806SB	IC	RF AMP	
⚠	IC602	BA6897FP	IC	DRIVER	
	IC603	MN35510	IC	1CHIP PROCESSER	
	Q 601	2SA952(L,K)	TRANSISTOR		
	Q 631	2SA952(L,K)	TRANSISTOR		
	R 601	QRD161J-123	C RESISTOR	12K 5% 1/4W	

BLOCK NO. 08

⚠	REF.	PARTS NO.	PARTS NAME	REMARKS	SUFFIX
	R 603	QRD161J-125	C RESISTOR	1.2M 5% 1/4W	
	R 605	QRD167J-134	C RESISTOR	130K 5% 1/4W	
	R 606	QRD161J-913	C RESISTOR	91K 5% 1/4W	
	R 607	QRD161J-273	C RESISTOR	27K 5% 1/4W	
	R 609	QRD161J-114	C RESISTOR	110K 5% 1/4W	
	R 610	QRD161J-154	C RESISTOR	150K 5% 1/4W	
	R 612	QRD161J-103	C RESISTOR	10K 5% 1/4W	
	R 613	QRD167J-121	C RESISTOR	120 5% 1/4W	
	R 614	QRD161J-100	C RESISTOR	10 5% 1/4W	
	R 615	QRD161J-120	C RESISTOR	12 5% 1/4W	
	R 616	QRD161J-910Y	C RESISTOR	91 5% 1/4W	
	R 621	QRD161J-330	C RESISTOR	33 5% 1/4W	
	R 622	QRD161J-330	C RESISTOR	33 5% 1/4W	
	R 623	QRD161J-330	C RESISTOR	33 5% 1/4W	
	R 631	QRD161J-331	C RESISTOR	330 5% 1/4W	
	R 632	QRD161J-101	C RESISTOR	100 5% 1/4W	
	R 633	QRD161J-273	C RESISTOR	27K 5% 1/4W	
	R 641	QRD161J-563	C RESISTOR	56K 5% 1/4W	
	R 642	QRD161J-123	C RESISTOR	12K 5% 1/4W	
	R 643	QRD161J-822	C RESISTOR	8.2K 5% 1/4W	
	R 644	QRD161J-223	C RESISTOR	22K 5% 1/4W	
	R 645	QRD161J-223	C RESISTOR	22K 5% 1/4W	
	R 646	QRD161J-182	C RESISTOR	1.8K 5% 1/4W	
	R 647	QRD167J-562	C RESISTOR	5.6K 5% 1/4W	
	R 651	QRD161J-102	C RESISTOR	1.0K 5% 1/4W	
	R 652	QRD161J-102	C RESISTOR	1.0K 5% 1/4W	
	R 653	QRD161J-102	C RESISTOR	1.0K 5% 1/4W	
	R 654	QRD161J-102	C RESISTOR	1.0K 5% 1/4W	
	R 655	QRD161J-471	C RESISTOR	470 5% 1/4W	
	R 659	QRD161J-471	C RESISTOR	470 5% 1/4W	
	R 661	QRD161J-104	C RESISTOR	100K 5% 1/4W	
	R 662	QRD161J-155	C RESISTOR	1.5M 5% 1/4W	
	R 663	QRD161J-124	C RESISTOR	120K 5% 1/4W	
	R 664	QRD161J-471	C RESISTOR	470 5% 1/4W	
	R 666	QRD161J-220	C RESISTOR	22 5% 1/4W	
	R 671	QRD161J-102	C RESISTOR	1.0K 5% 1/4W	
	R 672	QRD161J-102	C RESISTOR	1.0K 5% 1/4W	
	X 651	VCX5016-934V	CRYSTAL	16.9344MHZ	

■ Reel Pulse Board

BLOCK NO. 09

⚠	REF.	PARTS NO.	PARTS NAME	REMARKS	SUFFIX
	CN 1	EMV7159-010	10P PLUG ASSY		
	D 1	1SR139-100	SI DIODE		
	IC 1	SG-105F3-BB/C	PHOTO SENSER		
	P 1	VMZ0015-002	POST PIN		
	SW 1	MXS00220MVL0	CASSETTE SWITCH	R.REC	
	SW 2	MXS00220MVL0	CASSETTE SWITCH	TAPE	
	SW 4	MXS00220MVL0	CASSETTE SWITCH	70U	
	SW 5	MXS00220MVL0	CASSETTE SWITCH	F.REC	
	SW 6	QSW0507-001	SWITCH		

■ Head Amplifier & Mechanism Control Board

BLOCK NO. 10

⚠	REF.	PARTS NO.	PARTS NAME	REMARKS	SUFFIX
	C 101	NCS21HJ-821AY	C CAPACITOR	820PF 5% 50V	
	C 102	NCS21HJ-221AY	C CAPACITOR	220PF 5% 50V	
	C 103	QEK40JM-227	E CAPACITOR	220MF 20% 6.3V	
	C 104	NCB21HK-333AY	C CAPACITOR	.033MF 10% 50V	
	C 105	NCB21HK-222AY	C CAPACITOR	2200PF 10% 50V	
	C 106	QEK41CM-106	E CAPACITOR	10MF 20% 16V	
	C 107	NCS21HJ-561AY	C CAPACITOR	560PF 5% 50V	
	C 108	QEK41EM-475	E CAPACITOR	4.7MF 20% 25V	
	C 109	QEK41EM-475	E CAPACITOR	4.7MF 20% 25V	
	C 110	NCB21HK-682AY	C CAPACITOR	6800PF 10% 50V	
	C 111	NCB21HK-122AY	C CAPACITOR	1200PF 10% 50V	
	C 112	NCB21EK-683AY	C CAPACITOR	.068MF 10% 25V	
	C 113	NCB21HK-222AY	C CAPACITOR	2200PF 10% 50V	
	C 121	NCS21HJ-331AY	C CAPACITOR	330PF 5% 50V	
	C 201	NCS21HJ-821AY	C CAPACITOR	820PF 5% 50V	
	C 202	NCS21HJ-221AY	C CAPACITOR	220PF 5% 50V	
	C 203	QEK40JM-227	E CAPACITOR	220MF 20% 6.3V	
	C 204	NCB21HK-333AY	C CAPACITOR	.033MF 10% 50V	
	C 205	NCB21HK-222AY	C CAPACITOR	2200PF 10% 50V	
	C 206	QEK41CM-106	E CAPACITOR	10MF 20% 16V	
	C 207	NCS21HJ-561AY	C CAPACITOR	560PF 5% 50V	
	C 208	QEK41EM-475	E CAPACITOR	4.7MF 20% 25V	
	C 209	QEK41EM-475	E CAPACITOR	4.7MF 20% 25V	
	C 210	NCB21HK-682AY	C CAPACITOR	6800PF 10% 50V	
	C 211	NCB21HK-122AY	C CAPACITOR	1200PF 10% 50V	
	C 212	NCB21EK-683AY	C CAPACITOR	.068MF 10% 25V	
	C 213	NCB21HK-222AY	C CAPACITOR	2200PF 10% 50V	
	C 221	NCS21HJ-331AY	C CAPACITOR	330PF 5% 50V	
	C 301	QEKF1AM-107ZN	E CAPACITOR	100MF 20% 10V	
	C 302	NCB21HK-393AY	C CAPACITOR	.039MF 10% 50V	
	C 303	QEK40JM-227	E CAPACITOR	220MF 20% 6.3V	
	C 304	QEK41CM-226	E CAPACITOR	22MF 20% 16V	
	C 305	QEK41CM-226	E CAPACITOR	22MF 20% 16V	
	C 306	QEK41CM-476	E CAPACITOR	47MF 20% 16V	
	C 307	NCB21HK-103AY	C CAPACITOR	.010MF 10% 50V	
	C 308	NCB21HK-562AY	C CAPACITOR	5600PF 10% 50V	
	C 309	NCB21HK-562AY	C CAPACITOR	5600PF 10% 50V	
	C 310	NCB21HK-223AY	C CAPACITOR	.022MF 10% 50V	
	C 311	NCB21HK-682AY	C CAPACITOR	6800PF 10% 50V	
	C 313	QEKF1AM-107ZN	E CAPACITOR	100MF 20% 10V	
	C 314	QCZ0205-155	ML CAPACITOR	1.5MF	
	C 315	QCZ0205-155	ML CAPACITOR	1.5MF	
	C 316	QFG32AJ-103ZN	PP CAPACITOR	.010MF 5% 100V	
	C 318	NCB21HK-103AY	C CAPACITOR	.010MF 10% 50V	
	C 319	QFG32AJ-821ZN	TF CAPACITOR	820PF 5% 100V	
	C 321	NCB21HK-103AY	C CAPACITOR	.010MF 10% 50V	
	C 322	QFG32AJ-152ZN	M CAPACITOR	1500PF 5% 100V	
	C 331	QEK41CM-476	E CAPACITOR	47MF 20% 16V	
	C 351	QEK41CM-106	E CAPACITOR	10MF 20% 16V	
	C 371	QEK41EM-475	E CAPACITOR	4.7MF 20% 25V	
	C 374	QEKF1AM-107ZN	E CAPACITOR	MOTOR +B	
	C 375	QEKF1AM-107ZN	E CAPACITOR	100MF 20% 10V	
	C 376	NCB21HK-103AY	C CAPACITOR	.010MF 10% 50V	
	CN 31	VMC0163-R06	CONNECTOR	PRI/HEAD	
	CN 32	QGB2011M1-10	CONNECTOR	PRI/MECHA	

BLOCK NO. 10

⚠	REF.	PARTS NO.	PARTS NAME	REMARKS	SUFFIX
	CN 33	VMC0163-R09	CONNECTOR	PRI/MICON	
	CN 34	VMC0163-R10	CONNECTOR	PRI/AMP	
	D 301	MA152WA-TX	DIODE		
	D 309	MA704A	S.K.DIODE		
	D 375	MA3051(M)	ZENER DIODE		
	FW 31	VWSC04-06A13K	EF FLAT		
	IC 31	BA3126N	IC	HEAD SW	
	IC 32	AN7317	IC	PB&REC	
	IC 33	BU4094BCF-X	IC		
	L 301	QQR0620-001	OSC COIL(BIAS)		
	L 303	VQP0033-100Z	INDUCTOR		
	Q 101	DTC114TKT146	TRANSISTOR		
	Q 102	DTC114TKT146	TRANSISTOR	REC EQ CONT.	
	Q 201	DTC114TKT146	TRANSISTOR		
	Q 202	DTC114TKT146	TRANSISTOR	REC EQ CONT.	
	Q 301	DTA144EKA-X	TRANSISTOR	REC EQ CONT.	
	Q 302	2SC2001(L,K)	TRANSISTOR		
	Q 303	2SC2001(L,K)	TRANSISTOR		
	Q 304	2SC2001(L,K)	TRANSISTOR		
	Q 305	2SC2001(L,K)	TRANSISTOR		
	Q 306	2SC1623(6)	TRANSISTOR		
	Q 307	2SC1623(6)	TRANSISTOR		
	Q 308	2SC1623(6)	TRANSISTOR		
	Q 309	2SC1623(6)	TRANSISTOR		
	Q 321	DTC144EKA-X	TRANSISTOR		
	Q 323	2SC1623(6)	TRANSISTOR		
	Q 371	2SA952(L,K)	TRANSISTOR	MOTER+B	
	Q 372	DTC124EK	TRANSISTOR		
	Q 375	2SB562(C)	TRANSISTOR	SOLENOID DRIVE	
	Q 376	2SC1623(6)	TRANSISTOR		
	R 101	NRSA02J-220NY	MG RESISTOR	22 5% 1/10W	
	R 102	NRSA02J-182NY	MG RESISTOR	1.8K 5% 1/10W	
	R 103	NRSA02J-242	MG RESISTOR	2.4K 5% 1/10W	
	R 104	NRSA02J-122NY	MG RESISTOR	1.2K 5% 1/10W	
	R 105	NRSA02J-104NY	MG RESISTOR	100K 5% 1/10W	
	R 106	NRSA02J-332NY	MG RESISTOR	3.3K 5% 1/10W	
	R 107	NRSA02J-123NY	MG RESISTOR	12K 5% 1/10W	
	R 108	NRSA02J-562NY	MG RESISTOR	5.6K 5% 1/10W	
	R 109	NRSA02J-122NY	MG RESISTOR	1.2K 5% 1/10W	
	R 110	NRSA02J-472NY	MG RESISTOR	4.7K 5% 1/10W	
	R 111	NRSA02J-333NY	MG RESISTOR	33K 5% 1/10W	
	R 112	NRSA02J-222NY	MG RESISTOR	2.2K 5% 1/10W	
	R 113	NRSA02J-472NY	MG RESISTOR	4.7K 5% 1/10W	
	R 114	NRSA02J-272NY	MG RESISTOR	2.7K 5% 1/10W	
	R 116	NRSA02J-102NY	MG RESISTOR	1.0K 5% 1/10W	
	R 121	NRSA02J-102NY	MG RESISTOR	1.0K 5% 1/10W	
	R 201	NRSA02J-220NY	MG RESISTOR	22 5% 1/10W	
	R 202	NRSA02J-182NY	MG RESISTOR	1.8K 5% 1/10W	
	R 203	NRSA02J-242	MG RESISTOR	2.4K 5% 1/10W	
	R 204	NRSA02J-122NY	MG RESISTOR	1.2K 5% 1/10W	
	R 205	NRSA02J-104NY	MG RESISTOR	100K 5% 1/10W	
	R 206	NRSA02J-332NY	MG RESISTOR	3.3K 5% 1/10W	
	R 207	NRSA02J-123NY	MG RESISTOR	12K 5% 1/10W	
	R 208	NRSA02J-562NY	MG RESISTOR	5.6K 5% 1/10W	
	R 209	NRSA02J-122NY	MG RESISTOR	1.2K 5% 1/10W	

BLOCK NO. 10

⚠	REF.	PARTS NO.	PARTS NAME	REMARKS	SUFFIX
	R 210	NRSA02J-472NY	MG RESISTOR	4.7K 5% 1/10W	
	R 211	NRSA02J-333NY	MG RESISTOR	33K 5% 1/10W	
	R 212	NRSA02J-222NY	MG RESISTOR	2.2K 5% 1/10W	
	R 213	NRSA02J-472NY	MG RESISTOR	4.7K 5% 1/10W	
	R 214	NRSA02J-272NY	MG RESISTOR	2.7K 5% 1/10W	
	R 216	NRSA02J-102NY	MG RESISTOR	1.0K 5% 1/10W	
	R 221	NRSA02J-102NY	MG RESISTOR	1.0K 5% 1/10W	
	R 301	NRS181J-221NY	MG RESISTOR	220 5% 1/8W	
	R 303	NRSA02J-393NY	MG RESISTOR	39K 5% 1/10W	
	R 304	NRS181J-101NY	MG RESISTOR	100 5% 1/8W	
	R 305	NRSA02J-222NY	MG RESISTOR	2.2K 5% 1/10W	
	R 306	NRSA02J-222NY	MG RESISTOR	2.2K 5% 1/10W	
	R 310	NRS181J-560NY	MG RESISTOR	56 5% 1/8W	
	R 311	NRS181J-560NY	MG RESISTOR	56 5% 1/8W	
	R 313	NRSA02J-3R3NYM	MG RESISTOR	3.3 5% 1/10W	
	R 314	NRSA02J-223NY	MG RESISTOR	22K 5% 1/10W	
	R 315	NRSA02J-100NY	MG RESISTOR	10 5% 1/10W	
	R 316	NRSA02J-223NY	MG RESISTOR	22K 5% 1/10W	
	R 317	NRSA02J-100NY	MG RESISTOR	10 5% 1/10W	
	R 319	NRSA02J-152NY	MG RESISTOR	1.5K 5% 1/10W	
	R 322	NRSA02J-152NY	MG RESISTOR	1.5K 5% 1/10W	
	R 327	NRSA02J-474NY	MG RESISTOR	470K 5% 1/10W	
	R 332	NRSA02J-123NY	MG RESISTOR	12K 5% 1/10W	
	R 333	NRSA02J-123NY	MG RESISTOR	12K 5% 1/10W	
	R 335	NRSA02J-152NY	MG RESISTOR	1.5K 5% 1/10W	
	R 336	NRSA02J-472NY	MG RESISTOR	4.7K 5% 1/10W	
	R 337	NRSA02J-332NY	MG RESISTOR	3.3K 5% 1/10W	
	R 338	NRSA02J-392NY	MG RESISTOR	3.9K 5% 1/10W	
	R 339	NRSA02J-222NY	MG RESISTOR	2.2K 5% 1/10W	
	R 340	NRS181J-391NY	MG RESISTOR	390 5% 1/8W	
	R 341	NRSA02J-123NY	MG RESISTOR	12K 5% 1/10W	
	R 342	NRSA02J-203NY	MG RESISTOR	20K 5% 1/10W	
	R 343	NRSA02J-183NY	MG RESISTOR	18K 5% 1/10W	
	R 351	NRSA02J-683NY	MG RESISTOR	68K 5% 1/10W	
	R 352	NRSA02J-912NY	MG RESISTOR	9.1K 5% 1/10W	
	R 371	NRSA02J-123NY	MG RESISTOR	12K 5% 1/10W	
	R 372	NRSA02J-102NY	MG RESISTOR	1.0K 5% 1/10W	
	R 375	NRSA02J-151NY	MG RESISTOR	150 5% 1/10W	
	R 376	NRSA02J-472NY	MG RESISTOR	4.7K 5% 1/10W	
	VR 31	QVPA603-503A	SEMI V RESISTOR	BIAS ADJ	
	VR 32	QVPA603-503A	SEMI V RESISTOR	BIAS ADJ	
	VR 37	QVPA603-103M	SEMI V RESISTOR	TAPE SPEED ADJ	

Packing Materials and Accessories Parts List

Block No. M 4 M M
Block No. M 5 M M

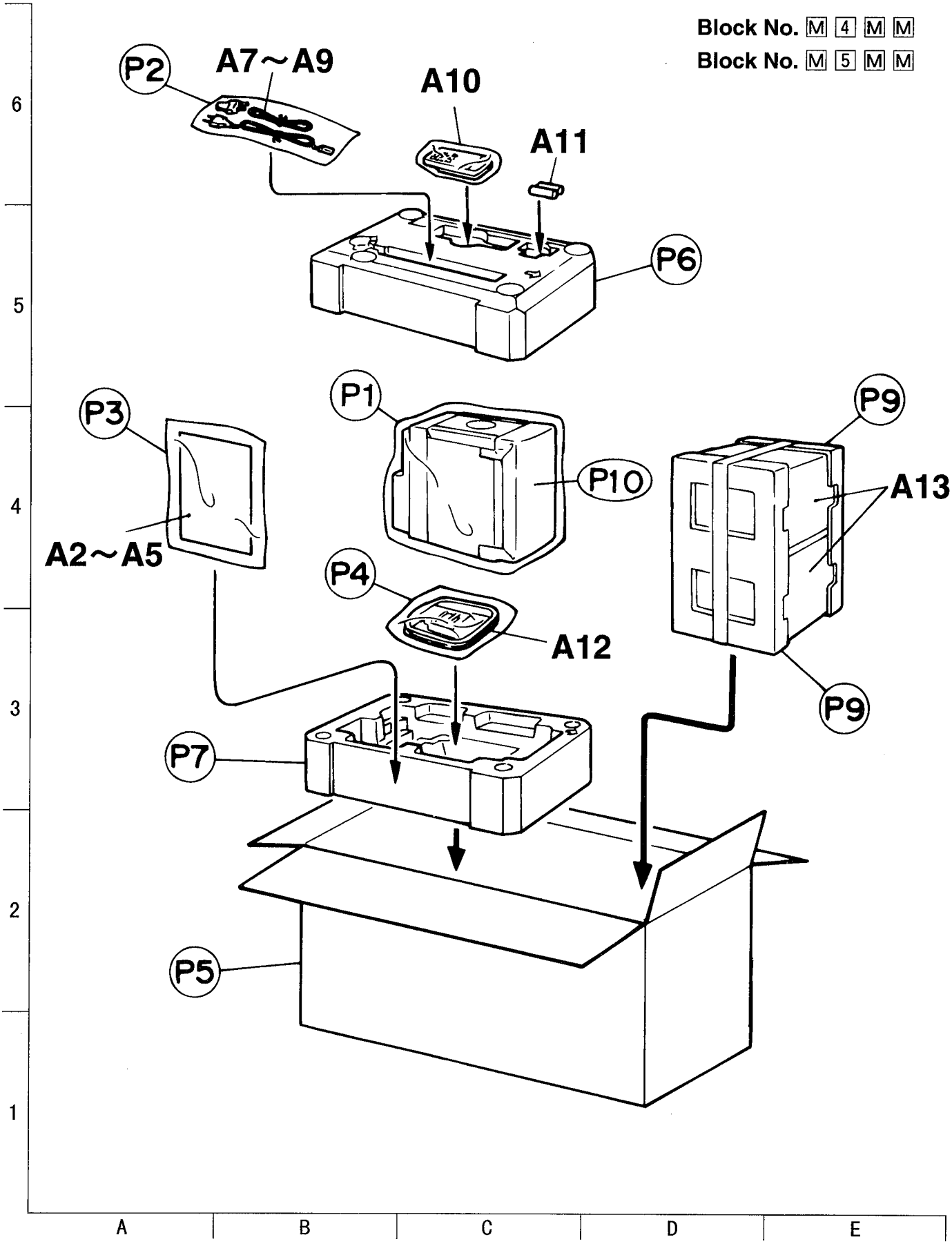

■ Packing Parts List

BLOCK NO. M4MM

⚠	REF.	PARTS NO.	PARTS NAME	REMARKS	QTY	SUFFIX	CLR
	P 1	VPE3026-006	POLY BAG	FOR SET	1		
	P 2	QPA01202505	POLY BAG	FOR P.CORD	1	E,EE,EN	
		QPA01202505	POLY BAG	FOR P.CORD	1	U,US,UX,UF	
		QPGA015-03503	POLY BAG	FOR P.CORD	1	B,UB	
	P 3	VPE3026-004	POLY BAG	INSTRUCTIONS	1		
	P 4	QPA01702503P	POLY BAG	FOR AM ANT	1		
	P 5	LV10070-001A	CARTON	UX-T150	1	B,E,EE,EN	
		LV10070-001A	CARTON	UX-T150	1	U,UB,US,UX	
		LV10070-002A	CARTON	UX-T150	1	UF	
		LV10071-001A	CARTON	UX-T151	1		
	P 6	VPH1709-001	CUSHION(UPPER)		1		
	P 7	VPH1709-002	CUSHION(BOTTOM)		1		
	P 9	VGSP024-004	SP CUSHION		2		
	P 10	VPK3001-012	SHEET		1		

■ Accessories

BLOCK NO. M5MM

⚠	REF.	PARTS NO.	PARTS NAME	REMARKS	QTY	SUFFIX	CLR
	A 2	LVT0056-006A	INSTRUCTIONS		1	U,UX	
		LVT0056-007A	INSTRUCTIONS		1	U,UB,US,UX	
		LVT0056-001A	INSTRUCTIONS		1	B	
		LVT0056-002A	INSTRUCTIONS		1	E	
		LVT0056-003A	INSTRUCTIONS		1	E,EN	
		LVT0056-004A	INSTRUCTIONS		1	EN	
		LVT0056-005A	INSTRUCTIONS		1	EE	
		LVT0056-008A	INSTRUCTIONS		1	UF	
	A 3	BT-54008-1	WARRANTY CARD		1	B,E,EE,EN	
		BT-59007-1	WARRANTY CARD		1	UF	
	A 4	BT-59009-1	S.CENTER LIST		1	UF	
	A 5	E43486-340B	SAFETY INST		1	B	
	A 7	ENZ2202-001	AC PLUG ADAPTER		1	U,US	
		ENZ2203-001	SIEMENS PLUG		1	UX	
	A 8	QMPP060-183-JD	POWER CORD	UX-T150	1	UB	
		QMPS020-183-JC	POWER CORD	UX-T150	1	UF	
		QMP39F0-183	POWER CORD	UX-T150	1	U,US	
		QMP39F0-183	POWER CORD	UX-T151	1	E,EN	
		QMP5520-183BS	POWER CORD	UX-T150/T151	1	B	
		QMP7350-150	POWER CORD	UX-T150	1	UX	
		QMP39F0-183E	POWER CORD	UX-T150	1	E,EE,EN	
	A 9	EWP201-011	B. IN ANT	FM ANT	1	U,UB,US,UX	
		EWP201-011	B. IN ANT	FM ANT	1	UF	
		EWP503-001	B. IN ANT	FM ANT	1	B,E,EE,EN	
	A 10	VGR0063-201	REMOCON UNIT		1		
	A 11	R6SPTT/2STS	BATTERY	FOR REMOCON	1		
	A 12	QAL0014-001	AM LOOP ANT	AM ANT	1		
	A 13	UXT150U-SPBOX	SPEAKER BOX	UX-T150	2	U,UB,US,UX	
		UXT100HK-SPBOX	SPEAKER BOX	UX-T151	2		
		UXT150H-SPBOX	SPEAKER BOX	UX-T150	2	B,E,EE,EN	
		UXT150U-SPBOX	SPEAKER BOX	UX-T150	2	UF	

JVC
VICTOR COMPANY OF JAPAN, LIMITED
AUDIO DIVISION,10-1,1Chome,Ohwatari-machi,Maebashi-city,371-8543,Japan

(No.20685)

Printed in Japan
9805(O)